SUN2000-(8K, 10K)-LC0 Series

User Manual

Issue	07
Date	2024-10-25

HUAWEI DIGITAL POWER TECHNOLOGIES CO., LTD.

Copyright © Huawei Digital Power Technologies Co., Ltd. 2024. All rights reserved.

No part of this document may be reproduced or transmitted in any form or by any means without prior written consent of Huawei Digital Power Technologies Co., Ltd.

Trademarks and Permissions

HUAWEI and other Huawei trademarks are the property of Huawei Technologies Co., Ltd.
All other trademarks and trade names mentioned in this document are the property of their respective holders.

Notice

The purchased products, services and features are stipulated by the contract made between Huawei Digital Power Technologies Co., Ltd. and the customer. All or part of the products, services and features described in this document may not be within the purchase scope or the usage scope. Unless otherwise specified in the contract, all statements, information, and recommendations in this document are provided "AS IS" without warranties, guarantees or representations of any kind, either express or implied. The information in this document is subject to change without notice. Every effort has been made in the preparation of this document to ensure accuracy of the contents, but all statements, information, and recommendations in this document do not constitute a warranty of any kind, express or implied.

Huawei Digital Power Technologies Co., Ltd.

Address: Huawei Digital Power Antuoshan Headquarters

Futian, Shenzhen 518043

People's Republic of China

Website: https://e.huawei.com

About This Document

Purpose

This document describes the following inverter models (also referred to as SUN2000) in terms of the safety precautions, product introduction, installation, electrical connections, power-on and commissioning, maintenance, and technical specifications. Read this document carefully before installing and operating the inverter.

- SUN2000-8K-LC0
- SUN2000-10K-LC0
- SUN2000-8K-LC0-ZH
- SUN2000-10K-LC0-ZH

Intended Audience

This document is intended for:

- Installers
- Users

Symbol Conventions

The symbols that may be found in this document are defined as follows.

Symbol	Description
DANGER	Indicates a hazard with a high level of risk which, if not avoided, will result in death or serious injury.
WARNING	Indicates a hazard with a medium level of risk which, if not avoided, could result in death or serious injury.
CAUTION	Indicates a hazard with a low level of risk which, if not avoided, could result in minor or moderate injury.

 Copyright © Huawei Digital Power Technologies Co., Ltd.

Symbol	Description
NOTICE	Indicates a potentially hazardous situation which, if not avoided, could result in equipment damage, data loss, performance deterioration, or unanticipated results. NOTICE is used to address practices not related to personal injury.
NOTE	Supplements the important information in the main text. NOTE is used to address information not related to personal injury, equipment damage, and environment deterioration.

Change History

Changes between document issues are cumulative. The latest document issue contains all the changes made in earlier issues.

Issue 07 (2024-10-25)

- Updated **H Certificate Management and Maintenance**.
- Updated **A Grid Codes**.
- Updated **5.7.3 Connecting RS485 Communications Cables (SmartGuard and Battery)**.

Issue 06 (2024-06-14)

- Updated **2.3 Appearance**.
- Updated **4.6 Installing the Inverter on a Wall**.
- Updated **4.7 Installing the Inverter on a Support**.
- Updated **7.1 Powering On the Inverter**.
- Updated **8.2 System Power-Off**.

Issue 05 (2024-03-30)

Updated **8.5 Replacing a Fan**.

Issue 04 (2024-01-15)

- Updated **5.2 Preparing Cables**.
- Updated **8.3 Troubleshooting**.
- Updated **9 Technical Specifications**.

Issue 03 (2023-12-29)

- Updated **5.2 Preparing Cables**.
- Updated **9 Technical Specifications**.

Issue 02 (2023-10-31)

Updated **5.4 Connecting an AC Output Power Cable**.

Issue 01 (2023-09-15)

This issue is the first official release.

Contents

About This Document ii

1 Safety Information 1

1.1 Personal Safety 2
1.2 Electrical Safety 4
1.3 Environment Requirements 7
1.4 Mechanical Safety 8

2 Overview 13

2.1 Model Number Description 13
2.2 Networking 14
2.3 Appearance 19
2.4 Working Modes 19
2.5 Label Description 21
2.6 Rapid Shutdown 22

3 Storage Requirements 24

4 Installation 25

4.1 Installation Modes 25
4.2 Installation Requirements 25
4.2.1 Site Selection Requirements 25
4.2.2 Clearance Requirements 26
4.2.3 Angle Requirements 28
4.3 Tools 28
4.4 Checking Before Installation 30
4.5 Moving the Inverter 31
4.6 Installing the Inverter on a Wall 31
4.7 Installing the Inverter on a Support 33

5 Electrical Connections 37

5.1 Precautions 37
5.2 Preparing Cables 38
5.3 Connecting a PE Cable 42
5.4 Connecting an AC Output Power Cable 44
5.5 Connecting DC Input Power Cables 48

5.6 (Optional) Connecting Battery Cables ... 52
5.7 Connecting Signal Cables ... 55
5.7.1 Connecting RS485 Communications Cables (Inverter Cascading) ... 58
5.7.2 Connecting RS485 Communications Cables (EMMA and Battery) ... 60
5.7.3 Connecting RS485 Communications Cables (SmartGuard and Battery) ... 63
5.7.4 Connecting RS485 Communications Cables (Power Meter and Battery) ... 67
5.7.5 Connecting Rapid Shutdown Signal Cables ... 69
5.8 (Optional) Installing the Smart Dongle and Anti-theft Components ... 71
5.9 (Optional) Installing an Antenna ... 73

6 Check Before Power-On ... 75

7 Power-On and Commissioning ... 76

7.1 Powering On the Inverter ... 76
7.2 Creating a Plant ... 78
7.2.1 Downloading the FusionSolar App ... 78
7.2.2 Installer Registration ... 79
7.2.3 Creating a Plant and an Owner Account ... 81
7.3 Setting Functions and Features Through Device Commissioning ... 83
7.3.1 Setting Common Parameters ... 83
7.3.2 (Optional) Setting the Physical Layout of the Smart PV Optimizers ... 84
7.3.3 AFCI ... 85
7.3.4 DRM (Australia AS 4777) ... 87
7.4 Viewing the Plant Creation Status ... 89

8 System Maintenance ... 91

8.1 Routine Maintenance ... 91
8.2 System Power-Off ... 93
8.3 Troubleshooting ... 93
8.4 Replacing an Inverter ... 93
8.5 Replacing a Fan ... 94
8.6 Locating Insulation Resistance Faults ... 94

9 Technical Specifications ... 98

A Grid Codes ... 106

B Connecting the Inverter on the App ... 108

C Connecting the EMMA on the App ... 112

D Baud Rate Negotiation ... 116

E Resetting Password ... 120

F Contact Information ... 121

G Digital Power Customer Service ... 123

H Certificate Management and Maintenance ... 124

H.1 Initial Certificate Risk Disclaimer..... 124
H.2 Application Scenarios of initial Certificates..... 125

I Acronyms and Abbreviations.....126

1 Safety Information

Statement

Before transporting, storing, installing, operating, using, and/or maintaining the equipment, read this document, strictly follow the instructions provided herein, and follow all the safety instructions on the equipment and in this document. In this document, "equipment" refers to the products, software, components, spare parts, and/or services related to this document; "the Company" refers to the manufacturer (producer), seller, and/or service provider of the equipment; "you" refers to the entity that transports, stores, installs, operates, uses, and/or maintains the equipment.

The **Danger**, **Warning**, **Caution**, and **Notice** statements described in this document do not cover all the safety precautions. You also need to comply with relevant international, national, or regional standards and industry practices. **The Company shall not be liable for any consequences that may arise due to violations of safety requirements or safety standards concerning the design, production, and usage of the equipment.**

The equipment shall be used in an environment that meets the design specifications. Otherwise, the equipment may be faulty, malfunctioning, or damaged, which is not covered under the warranty. The Company shall not be liable for any property loss, personal injury, or even death caused thereby.

Comply with applicable laws, regulations, standards, and specifications during transportation, storage, installation, operation, use, and maintenance.

Do not perform reverse engineering, decompilation, disassembly, adaptation, implantation, or other derivative operations on the equipment software. Do not study the internal implementation logic of the equipment, obtain the source code of the equipment software, violate intellectual property rights, or disclose any of the performance test results of the equipment software.

The Company shall not be liable for any of the following circumstances or their consequences:

- The equipment is damaged due to force majeure such as earthquakes, floods, volcanic eruptions, debris flows, lightning strikes, fires, wars, armed conflicts, typhoons, hurricanes, tornadoes, and other extreme weather conditions.
- The equipment is operated beyond the conditions specified in this document.

 Copyright © Huawei Digital Power Technologies Co., Ltd.

- The equipment is installed or used in environments that do not comply with international, national, or regional standards.
- The equipment is installed or used by unqualified personnel.
- You fail to follow the operation instructions and safety precautions on the product and in the document.
- You remove or modify the product or modify the software code without authorization.
- You or a third party authorized by you cause the equipment damage during transportation.
- The equipment is damaged due to storage conditions that do not meet the requirements specified in the product document.
- You fail to prepare materials and tools that comply with local laws, regulations, and related standards.
- The equipment is damaged due to your or a third party's negligence, intentional breach, gross negligence, or improper operations, or other reasons not related to the Company.

1.1 Personal Safety

DANGER

Ensure that power is off during installation. Do not install or remove a cable with power on. Transient contact between the core of the cable and the conductor will generate electric arcs or sparks, which may cause a fire or personal injury.

DANGER

Non-standard and improper operations on the energized equipment may cause fire, electric shocks, or explosion, resulting in property damage, personal injury, or even death.

DANGER

Before operations, remove conductive objects such as watches, bracelets, bangles, rings, and necklaces to prevent electric shocks.

DANGER

During operations, use dedicated insulated tools to prevent electric shocks or short circuits. The dielectric withstanding voltage level must comply with local laws, regulations, standards, and specifications.

 Copyright © Huawei Digital Power Technologies Co., Ltd.

WARNING

During operations, wear personal protective equipment such as protective clothing, insulated shoes, goggles, safety helmets, and insulated gloves.

Figure 1-1 Personal protective equipment

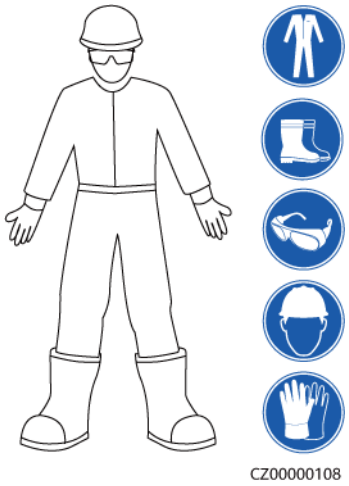

General Requirements

- Do not stop protective devices. Pay attention to the warnings, cautions, and related precautionary measures in this document and on the equipment.
- If there is a likelihood of personal injury or equipment damage during operations, immediately stop, report the case to the supervisor, and take feasible protective measures.
- Do not power on the equipment before it is installed or confirmed by professionals.
- Do not touch the power supply equipment directly or with conductors such as damp objects. Before touching any conductor surface or terminal, measure the voltage at the contact point to ensure that there is no risk of electric shock.
- Do not touch operating equipment because the enclosure is hot.
- Do not touch a running fan with your hands, components, screws, tools, or boards. Otherwise, personal injury or equipment damage may occur.
- In the case of a fire, immediately leave the building or the equipment area and activate the fire alarm or call emergency services. Do not enter the affected building or equipment area under any circumstances.

Personnel Requirements

- Only professionals and trained personnel are allowed to operate the equipment.
  - Professionals: personnel who are familiar with the working principles and structure of the equipment, trained or experienced in equipment operations and are clear of the sources and degree of various potential hazards in equipment installation, operation, maintenance

  - Trained personnel: personnel who are trained in technology and safety, have required experience, are aware of possible hazards on themselves in certain operations, and are able to take protective measures to minimize the hazards on themselves and other people
- Personnel who plan to install or maintain the equipment must receive adequate training, be able to correctly perform all operations, and understand all necessary safety precautions and local relevant standards.
- Only qualified professionals or trained personnel are allowed to install, operate, and maintain the equipment.
- Only qualified professionals are allowed to remove safety facilities and inspect the equipment.
- Personnel who will perform special tasks such as electrical operations, working at heights, and operations of special equipment must possess the required local qualifications.
- Only authorized professionals are allowed to replace the equipment or components (including software).
- Only personnel who need to work on the equipment are allowed to access the equipment.

1.2 Electrical Safety

DANGER

Before connecting cables, ensure that the equipment is intact. Otherwise, electric shocks or fire may occur.

DANGER

Non-standard and improper operations may result in fire or electric shocks.

DANGER

Prevent foreign matter from entering the equipment during operations. Otherwise, equipment short-circuits or damage, load power derating, power failure, or personal injury may occur.

WARNING

For the equipment that needs to be grounded, install the ground cable first when installing the equipment and remove the ground cable last when removing the equipment.

 Copyright © Huawei Digital Power Technologies Co., Ltd.

WARNING

During the installation of PV strings and the inverter, the positive or negative terminals of PV strings may be short-circuited to ground if the power cables are not properly installed or routed. In this case, an AC or DC short circuit may occur and damage the inverter. The resulting device damage is not covered under any warranty.

CAUTION

Do not route cables near the air intake or exhaust vents of the equipment.

General Requirements

- Follow the procedures described in the document for installation, operation, and maintenance. Do not reconstruct or alter the equipment, add components, or change the installation sequence without permission.
- Obtain approval from the national or local electric utility company before connecting the equipment to the grid.
- Observe the power plant safety regulations, such as the operation and work ticket mechanisms.
- Install temporary fences or warning ropes and hang "No Entry" signs around the operation area to keep unauthorized personnel away from the area.
- Before installing or removing power cables, turn off the switches of the equipment and its upstream and downstream switches.
- Before performing operations on the equipment, check that all tools meet the requirements and record the tools. After the operations are complete, collect all of the tools to prevent them from being left inside the equipment.
- Before installing power cables, check that cable labels are correct and cable terminals are insulated.
- When installing the equipment, use a torque tool of a proper measurement range to tighten the screws. When using a wrench to tighten the screws, ensure that the wrench does not tilt and the torque error does not exceed 10% of the specified value.
- Ensure that bolts are tightened with a torque tool and marked in red and blue after double-check. Installation personnel mark tightened bolts in blue. Quality inspection personnel confirm that the bolts are tightened and then mark them in red. (The marks must cross the edges of the bolts.)

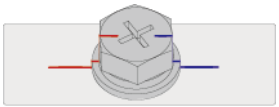

CZ0000112

- If the equipment has multiple inputs, disconnect all the inputs and wait until the equipment is completely powered off before performing operations on the equipment.
- Before maintaining a downstream electrical or power distribution device, turn off the output switch on the power supply equipment.

- During equipment maintenance, attach "Do not switch on" labels near the upstream and downstream switches or circuit breakers as well as warning signs to prevent accidental connection. The equipment can be powered on only after troubleshooting is complete.
- Do not open equipment panels.
- Check equipment connections periodically, ensuring that all screws are securely tightened.
- Only qualified professionals can replace a damaged cable.
- Do not scrawl, damage, or block any labels or nameplates on the equipment. Promptly replace labels that have worn out.
- Do not use solvents such as water, alcohol, or oil to clean electrical components inside or outside of the equipment.

Grounding

- Ensure that the grounding impedance of the equipment complies with local electrical standards.
- Ensure that the equipment is connected permanently to the protective ground. Before operating the equipment, check its electrical connection to ensure that it is reliably grounded.
- Do not work on the equipment in the absence of a properly installed ground conductor.
- Do not damage the ground conductor.

Cabling Requirements

- When selecting, installing, and routing cables, follow local safety regulations and rules.
- When routing power cables, ensure that there is no coiling or twisting. Do not join or weld power cables. If necessary, use a longer cable.
- Ensure that all cables are properly connected and insulated, and meet specifications.
- Ensure that the slots and holes for routing cables are free from sharp edges, and that the positions where cables are routed through pipes or cable holes are equipped with cushion materials to prevent the cables from being damaged by sharp edges or burrs.
- Ensure that cables of the same type are bound together neatly and straight and that the cable sheath is intact. When routing cables of different types, ensure that they are away from each other without entanglement and overlapping.
- Secure buried cables using cable supports and cable clips. Ensure that the cables in the backfill area are in close contact with the ground to prevent cable deformation or damage during backfilling.
- If the external conditions (such as the cable layout or ambient temperature) change, verify the cable usage in accordance with the IEC-60364-5-52 or local laws and regulations. For example, check that the current-carrying capacity meets requirements.
- When routing cables, reserve at least 30 mm clearance between the cables and heat-generating components or areas. This prevents deterioration or damage to the cable insulation layer.

 Copyright © Huawei Digital Power Technologies Co., Ltd.

1.3 Environment Requirements

DANGER

Do not expose the equipment to flammable or explosive gas or smoke. Do not perform any operation on the equipment in such environments.

DANGER

Do not store any flammable or explosive materials in the equipment area.

DANGER

Do not place the equipment near heat sources or fire sources, such as smoke, candles, heaters, or other heating devices. Overheat may damage the equipment or cause a fire.

WARNING

Install the equipment in an area far away from liquids. Do not install it under areas prone to condensation, such as under water pipes and air exhaust vents, or areas prone to water leakage, such as air conditioner vents, ventilation vents, or feeder windows of the equipment room. Ensure that no liquid enters the equipment to prevent faults or short circuits.

WARNING

To prevent damage or fire due to high temperature, ensure that the ventilation vents or heat dissipation systems are not obstructed or covered by other objects while the equipment is running.

General Requirements

- Store the equipment according to the storage requirements. Equipment damage caused by unqualified storage conditions is not covered under the warranty.
- Keep the installation and operating environments of the equipment within the allowed ranges. Otherwise, its performance and safety will be compromised.
- The operating temperature range provided in the equipment's technical specifications refers to the ambient temperatures in equipment's installation environment.

 Copyright © Huawei Digital Power Technologies Co., Ltd.

- Do not install, use, or operate outdoor equipment and cables (including but not limited to moving equipment, operating equipment and cables, inserting connectors to or removing connectors from signal ports connected to outdoor facilities, working at heights, performing outdoor installation, and opening doors) in harsh weather conditions such as lightning, rain, snow, and level 6 or stronger wind.
- Do not install the equipment in an environment with dust, smoke, volatile or corrosive gases, infrared and other radiations, organic solvents, or salty air.
- Do not install the equipment in an environment with conductive metal or magnetic dust.
- Do not install the equipment in an area conducive to the growth of microorganisms such as fungus or mildew.
- Do not install the equipment in an area with strong vibration, noise, or electromagnetic interference.
- Ensure that the site complies with local laws, regulations, and related standards.
- Ensure that the ground in the installation environment is solid, free from spongy or soft soil, and not prone to subsidence. The site must not be located in a low-lying land prone to water or snow accumulation, and the horizontal level of the site must be above the highest water level of that area in history.
- Do not install the equipment in a position that may be submerged in water.
- If the equipment is installed in a place with abundant vegetation, in addition to routine weeding, harden the ground underneath the equipment using cement or gravel (the area shall be greater than or equal to 3 m x 2.5 m).
- Do not install the equipment outdoors in salt-affected areas because it may be corroded. A salt-affected area refers to the region within 500 m of the coast or prone to sea breeze. Regions prone to sea breeze vary with weather conditions (such as typhoons and monsoons) or terrains (such as dams and hills).
- Before installation, operation, and maintenance, clean up any water, ice, snow, or other foreign objects on the top of the equipment.
- When installing the equipment, ensure that the installation surface is solid enough to bear the weight of the equipment.
- After installing the equipment, remove the packing materials such as cartons, foam, plastics, and cable ties from the equipment area.

1.4 Mechanical Safety

WARNING

Ensure that all necessary tools are ready and inspected by a professional organization. Do not use tools that have signs of scratches or fail to pass the inspection or whose inspection validity period has expired. Ensure that the tools are secure and not overloaded.

WARNING

Do not drill holes into the equipment. Doing so may affect the sealing performance and electromagnetic containment of the equipment and damage components or cables inside. Metal shavings from drilling may short-circuit boards inside the equipment.

General Requirements

- Repaint any paint scratches caused during equipment transportation or installation in a timely manner. Equipment with scratches must not be exposed for an extended period of time.
- Do not perform operations such as arc welding and cutting on the equipment without evaluation by the Company.
- Do not install other devices on the top of the equipment without evaluation by the Company.
- When performing operations over the top of the equipment, take measures to protect the equipment against damage.
- Use correct tools and operate them in the correct way.

Moving Heavy Objects

- Be cautious to prevent injury when moving heavy objects.

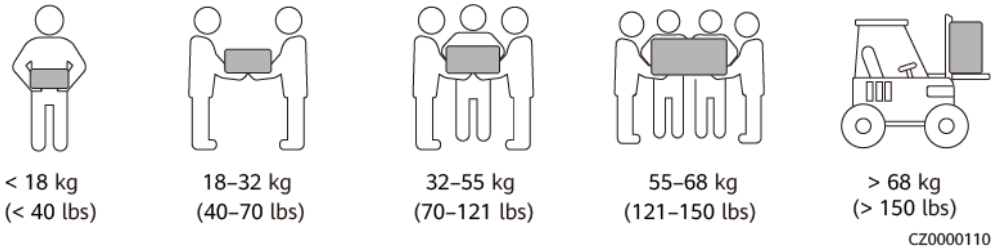

- If multiple persons need to move a heavy object together, determine the manpower and work division with consideration of height and other conditions to ensure that the weight is equally distributed.
- If two persons or more move a heavy object together, ensure that the object is lifted and landed simultaneously and moved at a uniform pace under the supervision of one person.
- Wear personal protective gears such as protective gloves and shoes when manually moving the equipment.
- To move an object by hand, approach to the object, squat down, and then lift the object gently and stably by the force of the legs instead of your back. Do not lift it suddenly or turn your body around.
- Do not quickly lift a heavy object above your waist. Place the object on a workbench that is half-waist high or any other appropriate place, adjust the positions of your palms, and then lift it.
- Move a heavy object stably with balanced force at an even and low speed. Put down the object stably and slowly to prevent any collision or drop from scratching the surface of the equipment or damaging the components and cables.

- When moving a heavy object, be aware of the workbench, slope, staircase, and slippery places. When moving a heavy object through a door, ensure that the door is wide enough to move the object and avoid bumping or injury.
- When transferring a heavy object, move your feet instead of turning your waist around. When lifting and transferring a heavy object, ensure that your feet point to the target direction of movement.
- When transporting the equipment using a pallet truck or forklift, ensure that the tynes are properly positioned so that the equipment does not topple. Before moving the equipment, secure it to the pallet truck or forklift using ropes. When moving the equipment, assign dedicated personnel to take care of it.
- Choose sea, roads in good conditions, or airplanes for transportation. Do not transport the equipment by railway. Avoid tilt or jolt during transportation.

Using Ladders

- Use wooden or insulated ladders when you need to perform live-line working at heights.
- Platform ladders with protective rails are preferred. Single ladders are not recommended.
- Before using a ladder, check that it is intact and confirm its load bearing capacity. Do not overload it.
- Ensure that the ladder is securely positioned and held firm.

CZ00000107

- When climbing up the ladder, keep your body stable and your center of gravity between the side rails, and do not overreach to the sides.
- When a step ladder is used, ensure that the pull ropes are secured.
- If a single ladder is used, the recommended angle for the ladder against the floor is 75 degrees, as shown in the following figure. A square can be used to measure the angle.

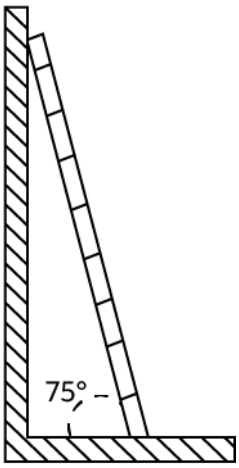

- If a single ladder is used, ensure that the wider end of the ladder is at the bottom, and take protective measures to prevent the ladder from sliding.
- If a single ladder is used, do not climb higher than the fourth rung of the ladder from the top.
- If you use a single ladder to climb up to a platform, ensure that the ladder is at least 1 m higher than the platform.

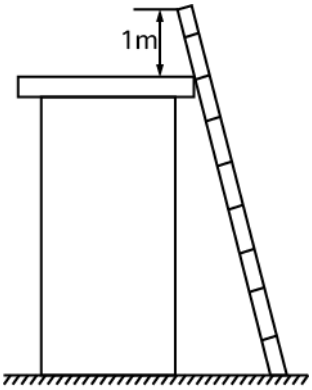

Hoisting

- Only trained and qualified personnel are allowed to perform hoisting operations.
- Install temporary warning signs or fences to isolate the hoisting area.
- Ensure that the foundation where hoisting is performed on meets the load-bearing requirements.
- Before hoisting objects, ensure that hoisting tools are firmly secured onto a fixed object or wall that meets the load-bearing requirements.
- During hoisting, do not stand or walk under the crane or the hoisted objects.
- Do not drag steel ropes and hoisting tools or bump the hoisted objects against hard objects during hoisting.
- Ensure that the angle between two hoisting ropes is no more than 90 degrees, as shown in the following figure.

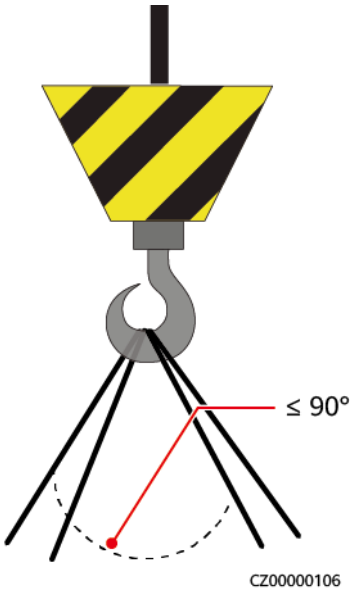

Drilling Holes

- Obtain consent from the customer and contractor before drilling holes.
- Wear protective equipment such as safety goggles and protective gloves when drilling holes.
- To avoid short circuits or other risks, do not drill holes into buried pipes or cables.
- When drilling holes, protect the equipment from shavings. After drilling, clean up any shavings.

2 Overview

The SUN2000 is a single-phase grid-tied string inverter that converts the DC power generated by PV strings into AC power and feeds the electricity into the power grid.

2.1 Model Number Description

This document involves the following product models:

- SUN2000-8K-LC0
- SUN2000-10K-LC0
- SUN2000-8K-LC0-ZH
- SUN2000-10K-LC0-ZH

Figure 2-1 Model number (using SUN2000-10K-LC0-ZH as an example)

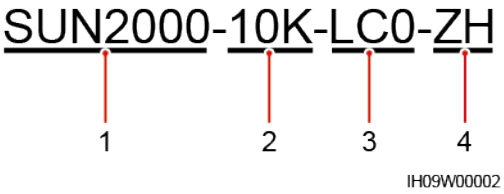

Table 2-1 Model number description

No.	Item	Description
1	Series name	SUN2000: grid-tied solar inverter
2	Power	• 8K: rated power of 8 kW • 10K: rated power of 10 kW
3	Design code	LC0: residential
4	Region	ZH: China

2.2 Networking

The SUN2000 applies to grid-tied PV systems for residential rooftop projects and small-sized ground-mounted plants. The system consists of PV strings, grid-tied inverters, AC switches, and power distribution units (PDUs).

EMMA Networking

Figure 2-2 EMMA networking (the components in dashed boxes are optional)

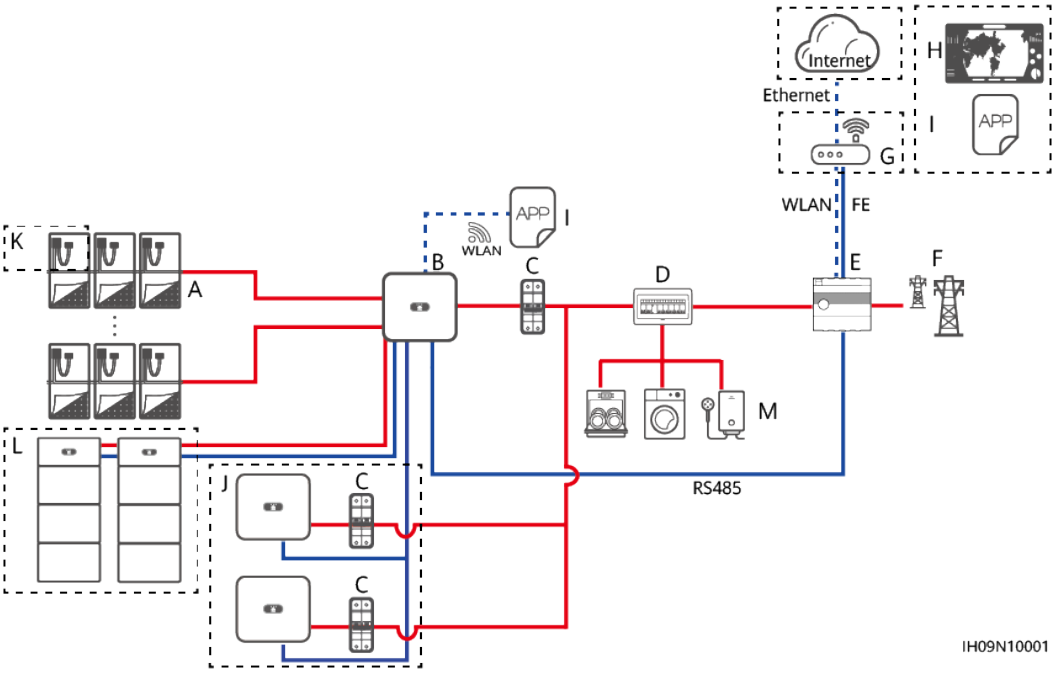

(A) PV strings	(B) SUN2000	(C) AC switches
(D) AC PDU	(E) EMMA	(F) Power grid
(G) Router	(H) FusionSolar management system	(I) FusionSolar app
(J) SUN2000	(K) Optimizer	(L) LUNA2000
(M) Load		

NOTE

- — indicates a power cable, — indicates a signal cable, and - - - indicates wireless communication.
- In the inverter cascading scenario, cascading with the SUN2000-(2KTL-6KTL)-L1 is supported, a maximum of three inverters can be cascaded, and each inverter can connect to a maximum of two energy storage systems (ESSs).
- In the inverter cascading scenario, the inverters connected to the power grid must meet the local power grid requirements.
- For details about EMMA networking, see **Residential Smart PV Solution Quick Guide (Single-Phase PV ESS Scenario + EMMA Networking)** or **Residential Smart PV Solution User Manual (EMMA Networking & SmartGuard Networking)**.

Smart Dongle Networking

Figure 2-3 Smart Dongle networking (the components in dashed boxes are optional)

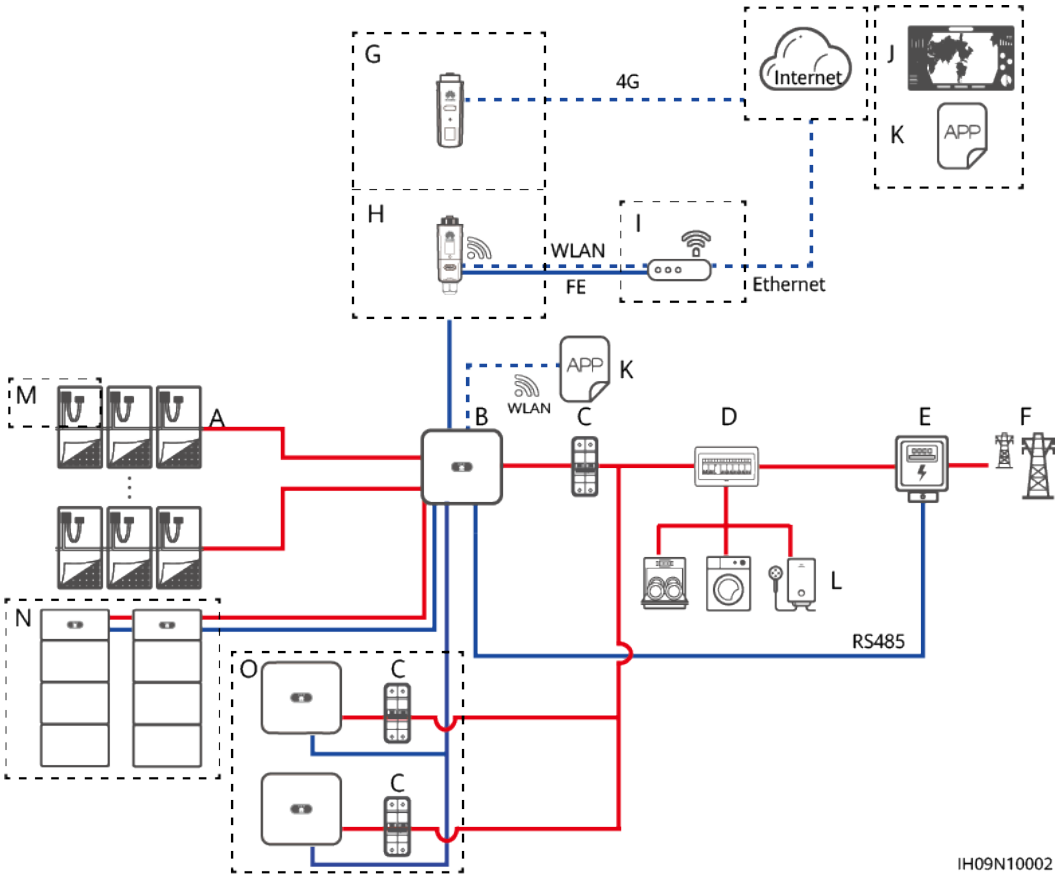

(A) PV strings	(B) SUN2000 (master)	(C) AC switches
(D) AC PDU	(E) Power meter	(F) Power grid
(G) 4G Smart Dongle	(H) WLAN-FE Smart Dongle	(I) Router

(J) FusionSolar management system	(K) FusionSolar app	(L) Load
(M) Optimizer	(N) LUNA2000	(O) SUN2000 (slave)

NOTE

- — indicates a power cable, — indicates a signal cable, and - - - indicates wireless communication.
- In the inverter cascading scenario, cascading with the SUN2000-(2KTL-6KTL)-L1 is supported, a maximum of three inverters can be cascaded, and each inverter can connect to a maximum of two energy storage systems (ESSs).
- In the inverter cascading scenario, only one power meter can be connected to the master inverter.
- In the inverter cascading scenario, the inverters connected to the power grid must meet the local power grid requirements.
- For details about Smart Dongle networking, see **Residential Smart PV Solution Quick Guide (Single-Phase PV+ESS Scenario + Smart Dongle Networking)** or **Residential Smart PV Solution User Manual (Smart Dongle Networking & Inverter Direct Connection)**.

SmartGuard Networking

Figure 2-4 SmartGuard networking (the components in dashed boxes are optional)

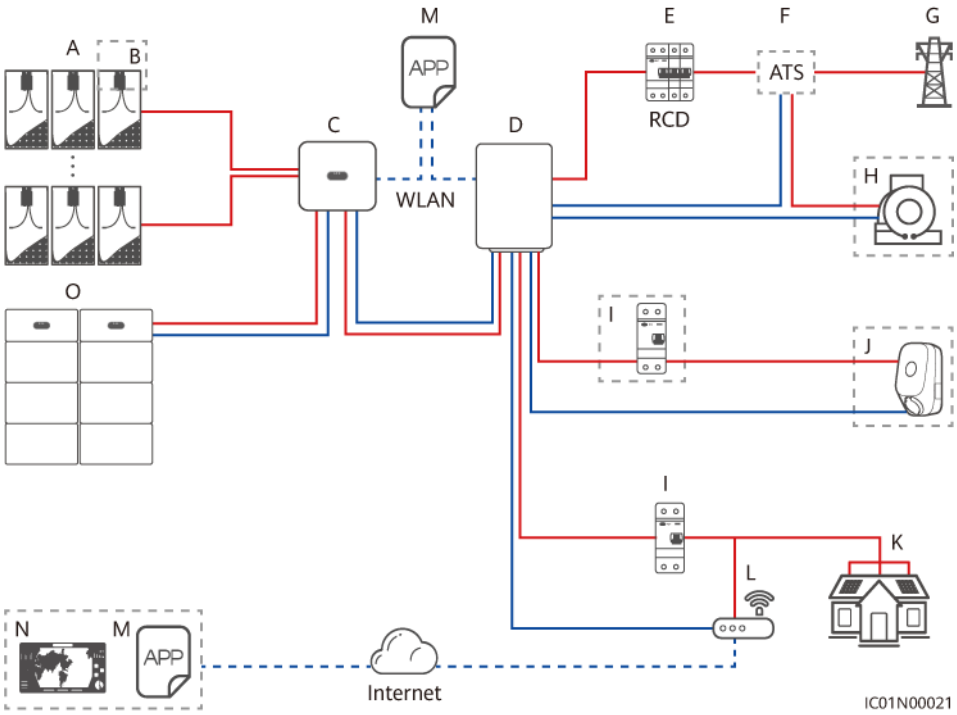

(A) PV string	(B) Smart PV Optimizer	(C) Inverter

(D) SmartGuard	(E) Main circuit breaker	(F) ATS
(G) Power grid	(H) Generator	(I) Residual current device (RCD)
(J) Non-backup load	(K) Backup load	(L) Router
(M) FusionSolar app	(N) FusionSolar SmartPVMS	(O) Battery

NOTE

- — indicates a power cable, — indicates a signal cable, and - - - indicates wireless communication.
- For details about SmartGuard networking, see **Residential Smart PV Solution Quick Guide (Single-Phase PV+ESS Scenario + SmartGuard Networking)** or **Residential Smart PV Solution User Manual (EMMA Networking & SmartGuard Networking)**.

NOTE

The MPPT voltage must be greater than the lower threshold of the full-load MPPT range specified in the inverter technical data sheet. Otherwise, the inverter power will be derated, leading to a reduction in the system yield.

NOTE

Inverters cannot be cascaded in the SmartGuard networking.

Supported Earthing Systems

The SUN2000 supports the TN-S, TN-C, TN-C-S, and TT earthing systems. In the TT earthing system, the N-to-PE voltage must be less than 30 V.

Figure 2-5 Earthing systems

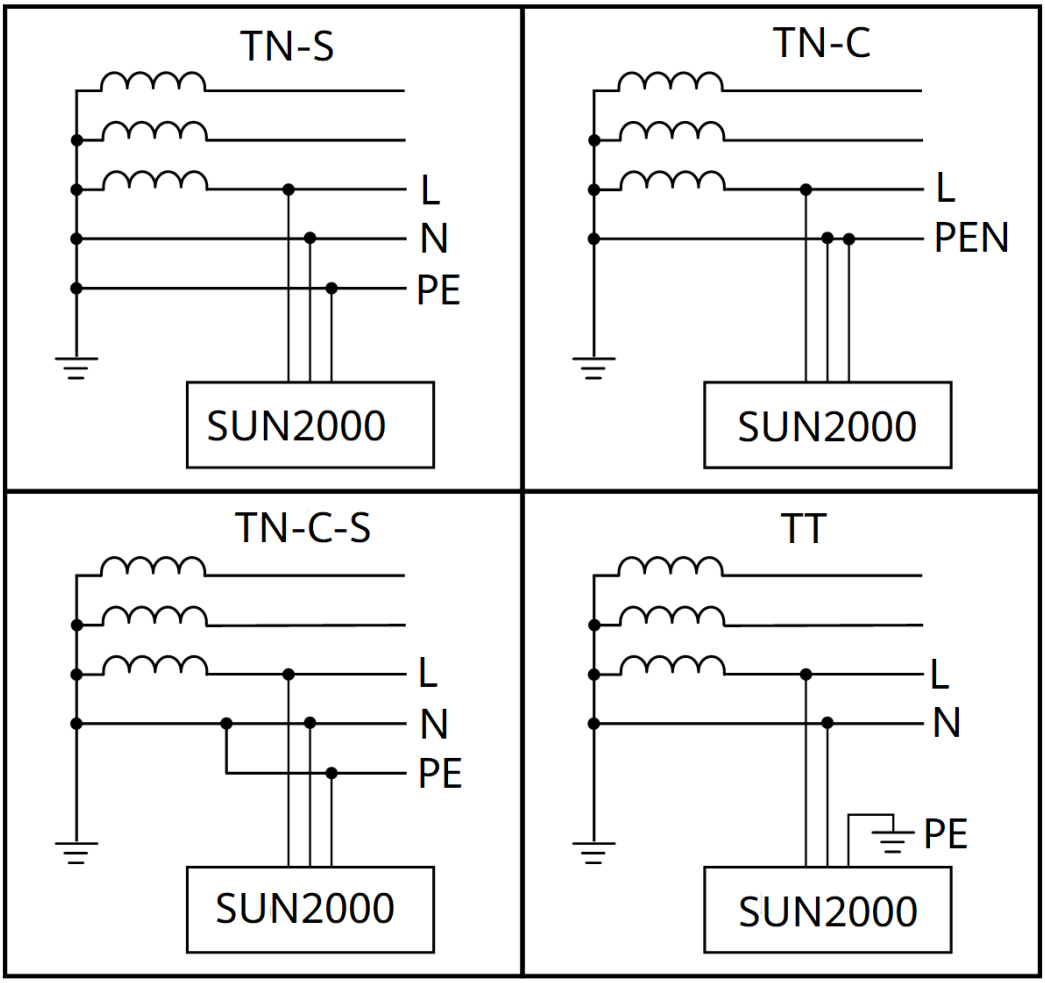

2.3 Appearance

Appearance and Ports

Figure 2-6 Appearance

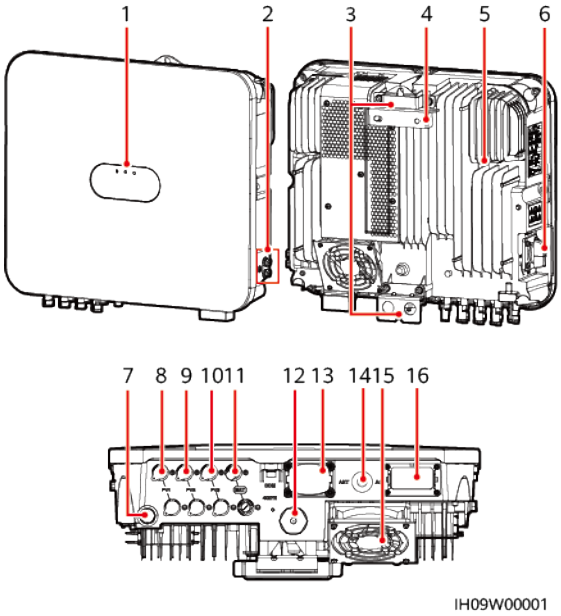

(1) LED indicators	(2) Ground screws
(3) Hanging kits	(4) Mounting bracket
(5) Heat sink	(6) DC switch (DC SWITCH)
(7) Ventilation valve	(8) DC input terminal (PV1+/PV1–)
(9) DC input terminal (PV2+/PV2–)	(10) DC input terminal (PV3+/PV3–)
(11) Battery terminal (BAT+/BAT–)	(12) Smart Dongle port (4G/FE)
(13) Communications port (COM)	(14) Antenna port (ANT)
(15) Fan[1]	(16) AC output port (AC)

Note [1]: Only the SUN2000-10K-LC0 and SUN2000-10K-LC0-ZH are equipped with fans.

2.4 Working Modes

The SUN2000 can work in Standby, Operating, or Shutdown mode.

Figure 2-7 Working modes

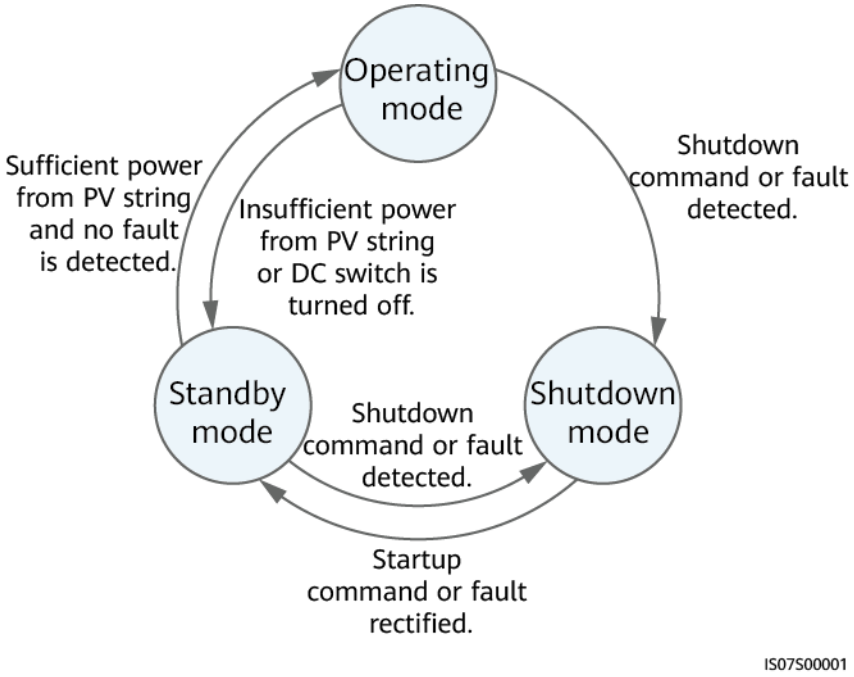

Table 2-2 Working mode description

Working Mode	Description
Standby	The SUN2000 enters Standby mode when the external environment does not meet the operating requirements. In Standby mode: ● The SUN2000 continuously performs status check and enters the Operating mode once the operating requirements are met. ● The SUN2000 enters Shutdown mode after detecting a shutdown command or a fault after startup.
Operating	In Operating mode: ● The SUN2000 converts DC power from PV strings into AC power and feeds the power to the power grid. ● The SUN2000 tracks the maximum power point to maximize the PV string output. ● If the SUN2000 detects a fault or a shutdown command, it enters the Shutdown mode. ● The SUN2000 enters Standby mode after detecting that the PV string output power is not suitable for connecting to the power grid for generating power.
Shutdown	● In Standby or Operating mode, the SUN2000 enters Shutdown mode after detecting a fault or shutdown command. ● In Shutdown mode, the SUN2000 enters Standby mode after detecting a startup command or that the fault is rectified.

2.5 Label Description

Enclosure Labels

Label	Symbol	Name	Meaning
		Delayed discharge	Residual voltage exists after the inverter is powered off. It takes 5 minutes for the inverter to discharge to the safe voltage level before maintenance.
		Burn warning	Do not touch the inverter when it is running because its enclosure is hot.
		Electric shock warning	• High voltage exists after the inverter is powered on. Only qualified and trained electrical technicians are allowed to perform operations on the inverter. • High touch current exists after the inverter is powered on. Before powering on the inverter, ensure that the inverter is properly grounded.
		Refer to documentation	Reminds operators to refer to the documents delivered the inverter.

 Copyright © Huawei Digital Power Technologies Co., Ltd.

Label	Symbol	Name	Meaning
		Operation warning	Do not remove the DC input connector or AC output connector when the inverter is running.
(1P)PN/ITEM:XXXXXXXX Y (32P)Model:XXXXXXXX (S)SN:XXXXXXXXXXXX MADE IN CHINA	-	Serial number (SN)	Indicates the product SN.
	-	QR code for inverter WiFi connection	Scan the QR code to connect to the inverter WiFi.

Product Nameplate

The nameplate contains the trademark, product model, important technical specifications, compliance symbols, company name, and place of origin.

2.6 Rapid Shutdown

If optimizers are configured for all PV modules, the PV system can perform a rapid shutdown to decrease the output voltage to below 30 V within 30s.

NOTE

- If method 3 is selected for rapid shutdown, log in to the FusionSolar app as an **installer** user to perform local commissioning, choose **Settings > Feature parameters > Dry contact function**, and set **Dry contact function** to **DI rapid shutdown**.
- The rapid shutdown function is supported only if optimizers are configured for all PV modules.

Perform the following steps to trigger a rapid shutdown:

- Method 1: Turn off the AC switch between the inverter and the power grid (disconnect the voltages of all PV strings connected to the inverter under the AC switch).
- Method 2: Set the **DC SWITCH** of the inverter to **OFF** to trigger a rapid shutdown. (Turning off all external switches on the DC side of an inverter can trigger a rapid shutdown, and only the PV strings connected to the inverter are de-energized. Turning off only some external switches cannot trigger a rapid shutdown, and the PV strings may be energized.)
- Method 3: To enable the DI rapid shutdown function, connect a switch to pins DI and GND of the inverter communications terminal. The switch is turned on by default. Turn off the switch to trigger a rapid shutdown. The distance between the switch and the farthest inverter must be less than or equal to 10 m.

- Method 4: If **AFCI** is enabled, the inverter automatically performs arc fault detection and triggers a rapid shutdown when AFCI lock protection is implemented.

3 Storage Requirements

The following requirements shall be met if inverters are not put into use immediately:

- Do not unpack inverters.
- Keep the storage temperature at –40°C to +70°C and the humidity at 5%–95% RH.
- Store inverters in a clean and dry place and protect them from dust and moisture.
- Inverters can be stacked in a maximum of eight layers. To avoid personal injury or device damage, stack inverters with caution to prevent them from falling over.
- During the storage period, check inverters periodically (recommended: once every three months). Replace the packing materials that are damaged by insects or rodents in a timely manner.
- If inverters have been stored for two years or longer, they must be checked and tested by professionals before being put into use.

 Copyright © Huawei Digital Power Technologies Co., Ltd.

4 Installation

4.1 Installation Modes

The inverter can be wall-mounted or support-mounted.

Table 4-1 Installation modes

Installation Mode	Screw Specifications	Description
Wall mounting	M6x60 stainless steel expansion bolt	Delivered with the product
Support mounting	M6 bolt assembly	Prepared by the customer

4.2 Installation Requirements

4.2.1 Site Selection Requirements

Basic Requirements

- The inverter is protected to IP66 and can be installed indoors or outdoors.
- Do not install the inverter in a place where personnel are easy to come into contact with its enclosure and heat sink, because these parts are hot during operation.
- Do not install the inverter in noise-sensitive areas.
- Do not install the inverter near flammable or explosive materials.
- Keep the inverter out of reach of children.
- The inverter will be corroded in salt areas, and the salt corrosion may cause fire. Do not install the inverter outdoors in salt areas. A salt-affected area

refers to the region within 500 m of the coast or prone to sea breeze. Regions prone to sea breeze vary with weather conditions (such as typhoons and monsoons) or terrains (such as dams and hills).

- Install the inverter in a well-ventilated environment to ensure good heat dissipation.
- You are advised to install the inverter in a sheltered area or install an awning over it.

Mounting Structure Requirements

- The mounting structure where the inverter is installed must be fire resistant.
- Do not install the inverter on flammable building materials.
- The inverter is heavy. Ensure that the installation surface is solid enough to bear the weight.
- In residential areas, do not install the inverter on a drywall or wall made of similar materials which have a weak sound insulation performance because the inverter generates noise during operation.

4.2.2 Clearance Requirements

Figure 4-1 shows the dimensions of mounting holes for the inverter.

Figure 4-1 Mounting bracket dimensions

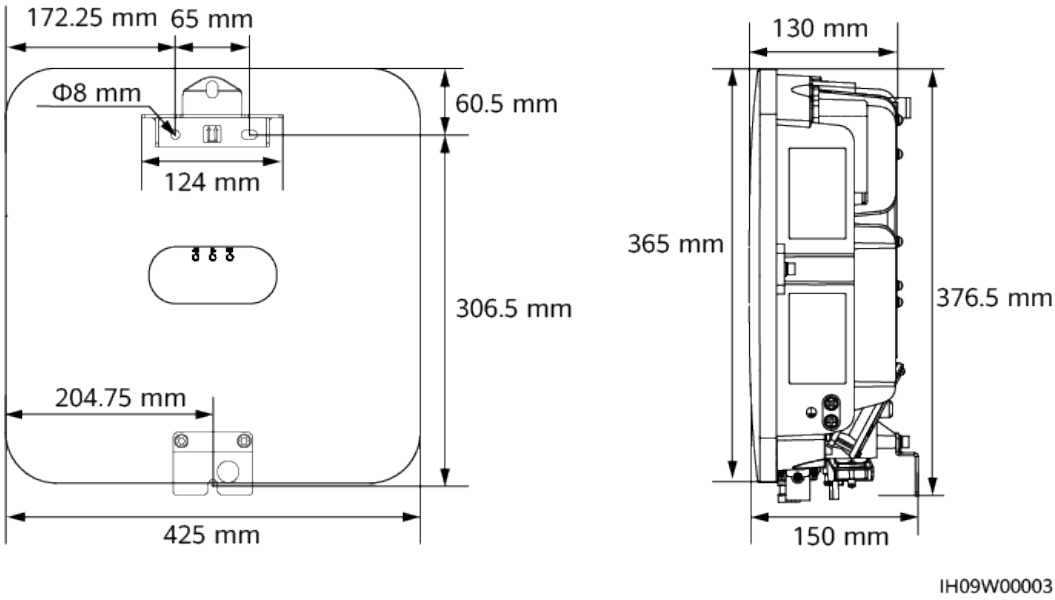

- Reserve enough clearances around the inverter to ensure sufficient space for installation and heat dissipation.

Figure 4-2 Clearances

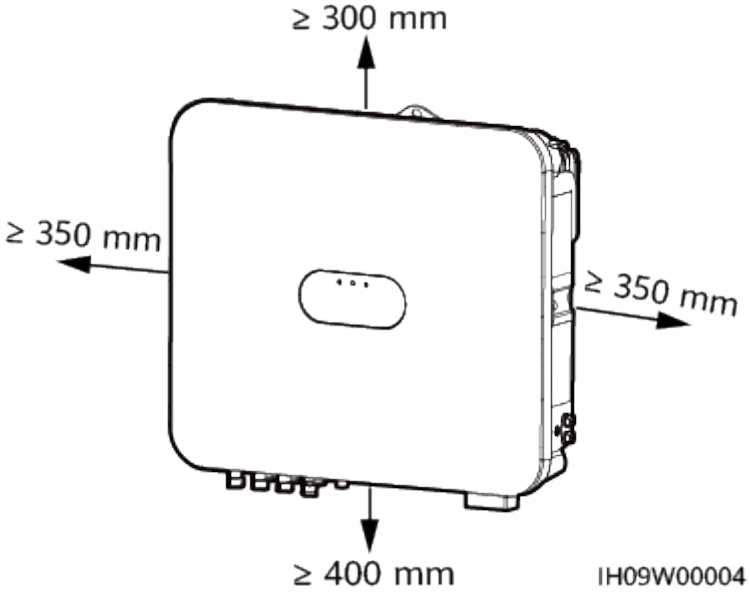

- When installing multiple inverters, install them in horizontal mode if sufficient space is available and install them in triangle mode if no sufficient space is available. Stacked installation is not recommended.

Figure 4-3 Horizontal installation mode (recommended)

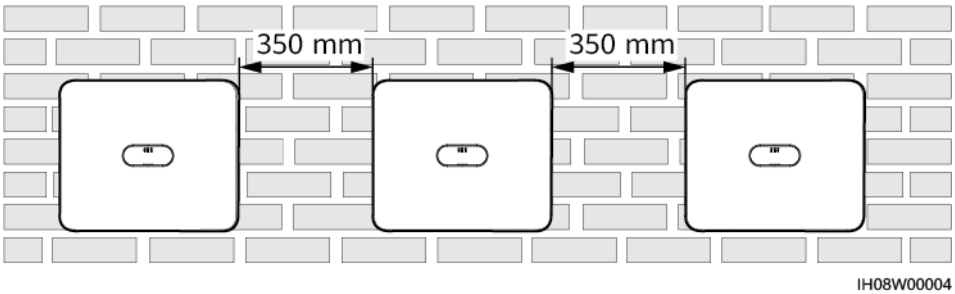

Figure 4-4 Triangle installation mode (recommended)

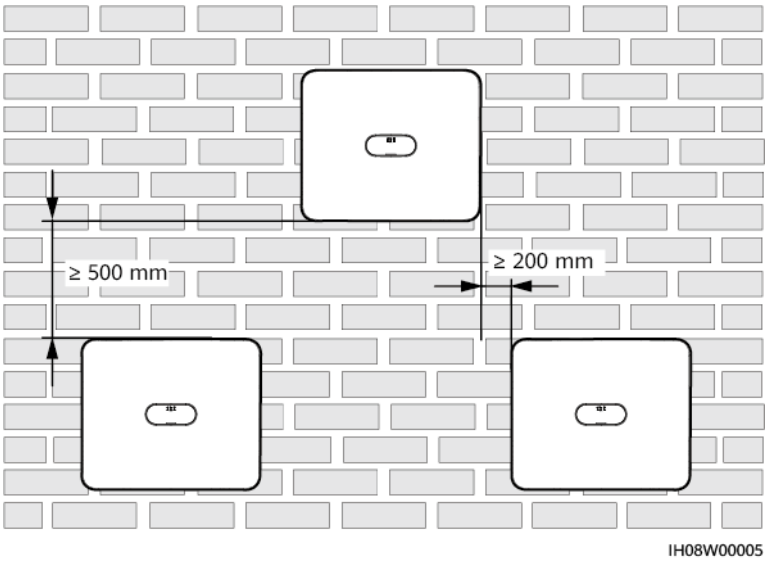

4.2.3 Angle Requirements

The inverter can be wall-mounted or support-mounted. The installation angle requirements are as follows:

- Install the inverter vertically or at a maximum back tilt of 15 degrees to facilitate heat dissipation.
- Do not install the inverter at forward tilted, excessive backward tilted, side tilted, horizontal, or upside down positions.

Figure 4-5 Installation angle

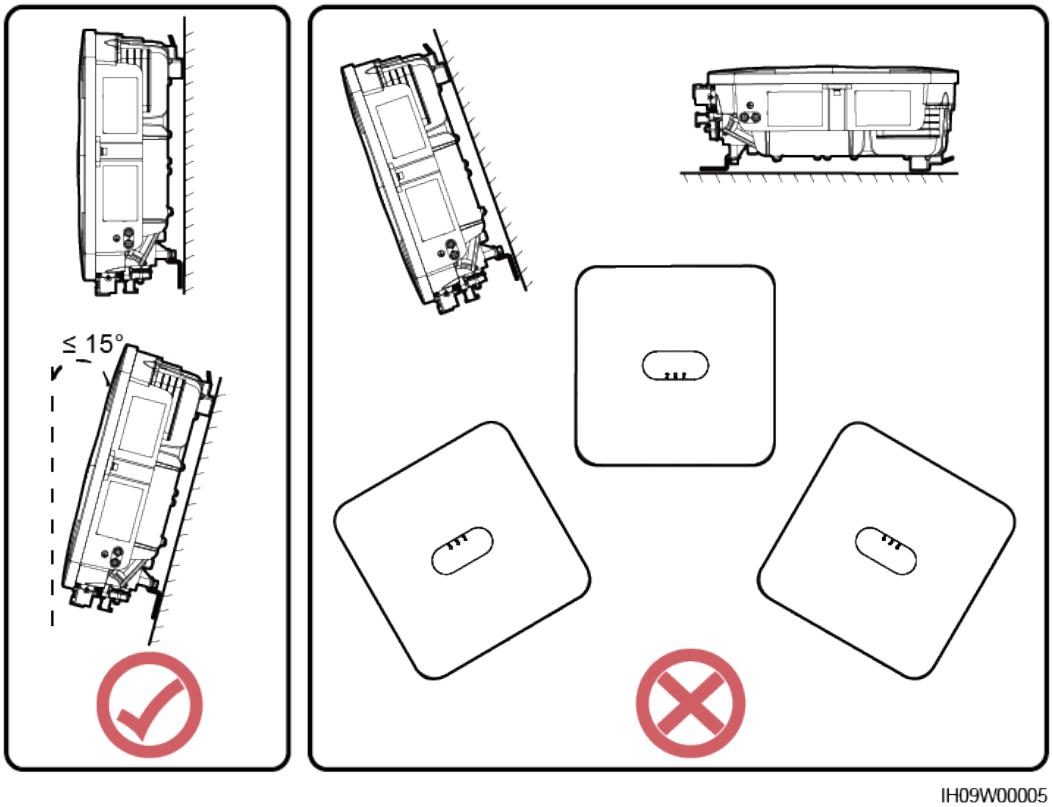

4.3 Tools

Type	Tool			
Installation tools	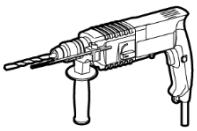 Hammer drill Drill bit: Φ8 mm, Φ6 mm	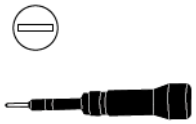 Flat-head insulated torque screwdriver	Phillips insulated torque screwdriver	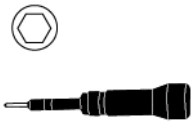 Hex insulated torque screwdriver

Type	Tool			
	Insulated torque socket wrench	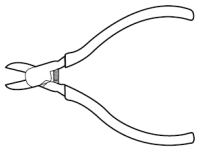 Diagonal pliers	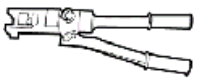 Hydraulic pliers	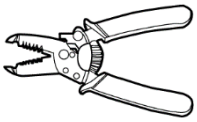 Wire stripper
	Cable tie	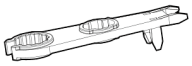 Removal wrench Model: H4TW0001	Rubber mallet	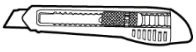 Utility knife
	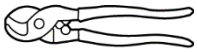 Cable cutter	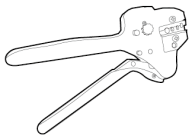 Crimping tool Model: H4TC0003	Multimeter DC voltage measurement range ≥ 1100 V DC	Vacuum cleaner
	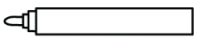 Marker	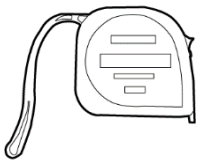 Steel measuring tape	Digital or bubble level	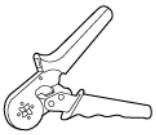 Cord end terminal crimping tool
	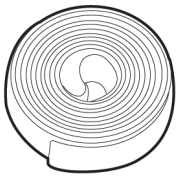 Heat shrink tubing	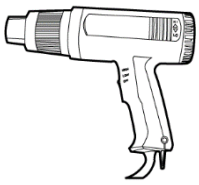 Heat gun	-	-

Type	Tool			
Personal protective equipment (PPE)	Insulated gloves	Protective gloves	Dust mask	Safety shoes
	Safety goggles	-	-	-

4.4 Checking Before Installation

Outer Packing Materials

Before unpacking the inverter, check the outer packing materials for damage, such as holes and cracks, and check the inverter model. If any damage is found or the inverter model is not what you requested, do not unpack the package and contact your supplier as soon as possible.

NOTE

You are advised to remove the packing materials within 24 hours before installing the inverter.

Package Contents

NOTICE

- After placing the equipment in the installation position, unpack it with care to prevent scratches. Keep the equipment stable during unpacking.

After unpacking the inverter, check that the contents are intact and complete. If any damage is found or any component is missing, contact your supplier.

NOTE

For details about the number of contents, see the *Packing List* in the packing case.

 Copyright © Huawei Digital Power Technologies Co., Ltd.

4.5 Moving the Inverter

Procedure

Step 1 Hold the handles on both sides of the inverter, lift the inverter from the packing case, and transport it to the installation position.

CAUTION

- Move the inverter with care to prevent device damage and personal injury.
- Do not use the wiring terminals and ports at the bottom to support any weight of the inverter.
- When you need to temporally place the inverter on the ground, use foam, cardboard, or other protection material to prevent damage to its enclosure.

Figure 4-6 Moving the inverter

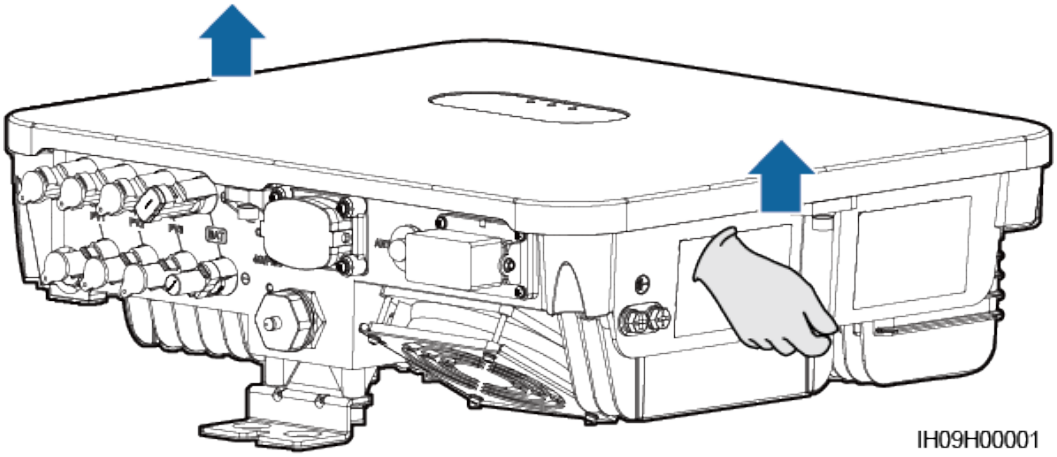

----End

4.6 Installing the Inverter on a Wall

Procedure

Step 1 Determine the positions for drilling holes using the marking-off template, level the holes using a level, and mark the positions using a marker.

Step 2 Secure the mounting bracket.

DANGER

Avoid drilling holes into the water pipes or power cables buried in the wall.

 Copyright © Huawei Digital Power Technologies Co., Ltd.

NOTE

- M6x60 expansion bolts are delivered with the inverter. If the length and amount of the bolts do not meet installation requirements, prepare M6 stainless steel expansion bolts by yourself.
- The expansion bolts delivered with the inverter are mainly used for solid brick-concrete walls. For other types of walls, prepare bolts by yourself and ensure that the wall meets the load bearing requirements of the inverter.

Figure 4-7 Expansion bolt composition

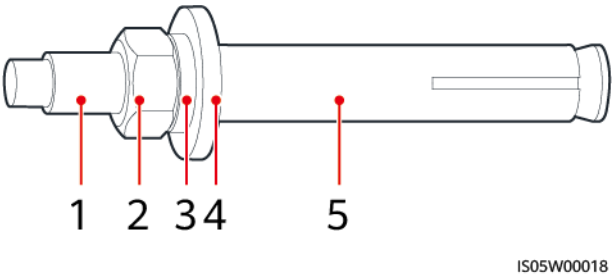

(1) Bolt	(2) Nut	(3) Spring washer
(4) Flat washer	(5) Expansion sleeve	

NOTICE

- To prevent dust inhalation or contact with eyes, wear safety goggles and a dust mask when drilling holes.
- Use a vacuum cleaner to clean up dust in and around the holes, and measure the spacing. If the holes are inaccurately positioned, drill the holes again.
- Level the top of the expansion sleeve with the concrete wall after removing the nut, spring washer, and flat washer. Otherwise, the mounting bracket will not be securely installed on the concrete wall.
- Loosen the nut, spring washer, and flat washer of the expansion bolt at the bottom.

Figure 4-8 Installing expansion bolts

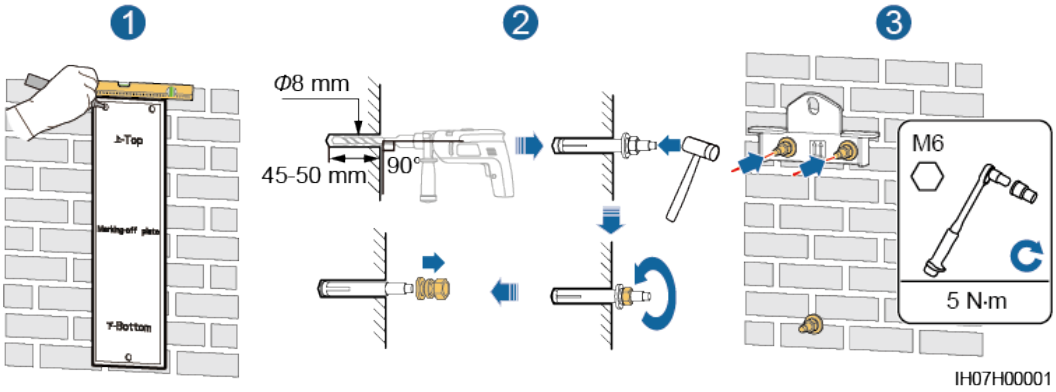

Step 3 Install the inverter on the mounting bracket.

Step 4 Tighten the nuts.

Figure 4-9 Tightening nuts

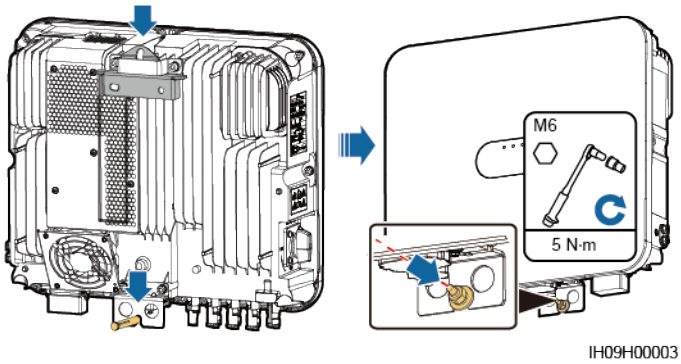

Step 5 (Optional) Install an anti-theft lock.

NOTICE

- Prepare an anti-theft lock suitable for the lock hole diameter (Φ10 mm).
- An outdoor waterproof lock is recommended.
- Keep the key to the anti-theft lock.

Figure 4-10 Installing an anti-theft lock

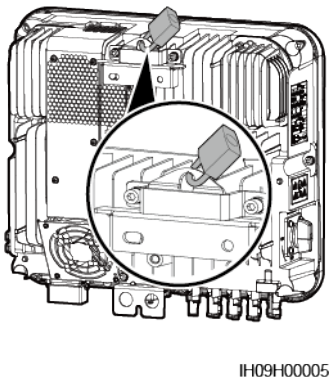

----End

4.7 Installing the Inverter on a Support

Step 1 Determine the positions for drilling holes using the marking-off template, and then mark the positions with a marker.

Figure 4-11 Determining hole positions

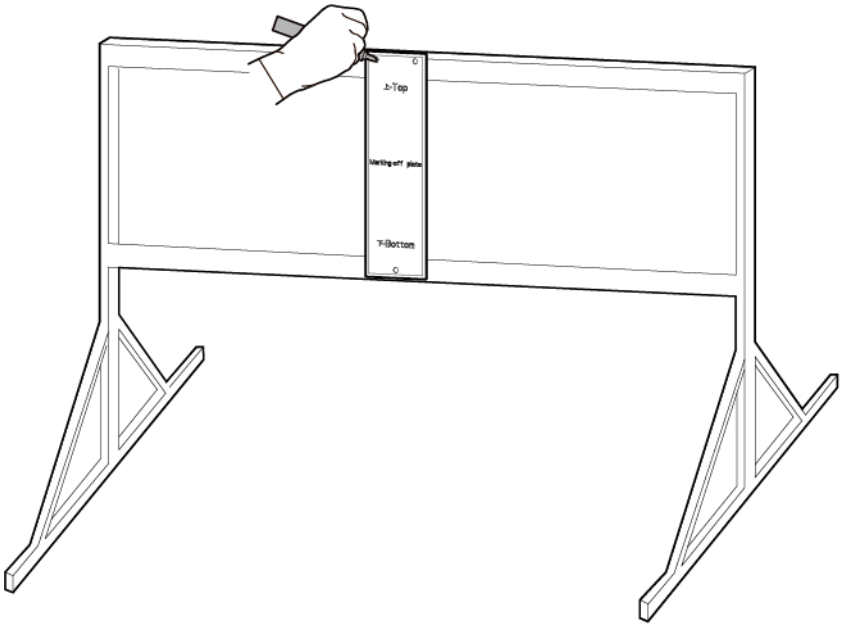

IH07H00011

Step 2 Drill holes using a hammer drill.

NOTE

You are advised to apply anti-rust paint on the hole positions for protection.

Figure 4-12 Drilling holes

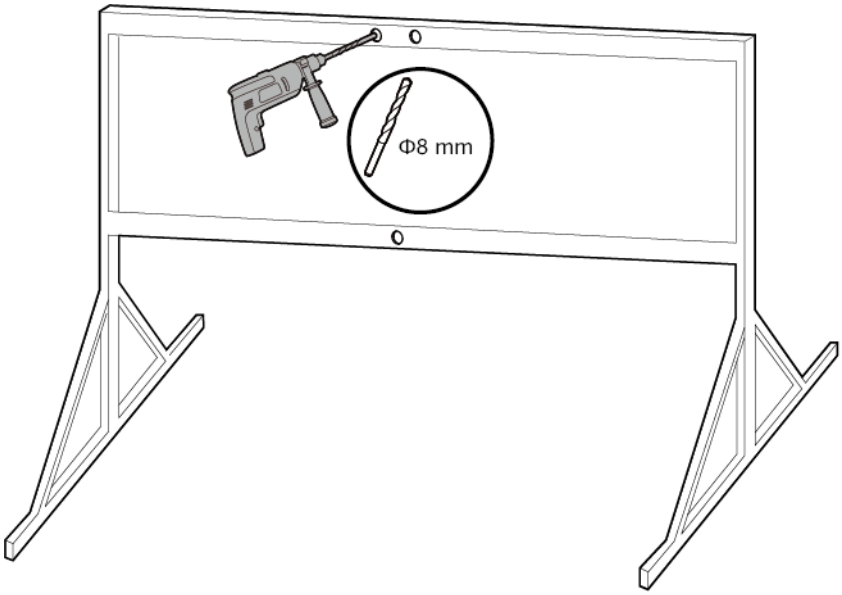

IH07H00012

Step 3 Secure the mounting bracket.

Figure 4-13 Securing the mounting bracket

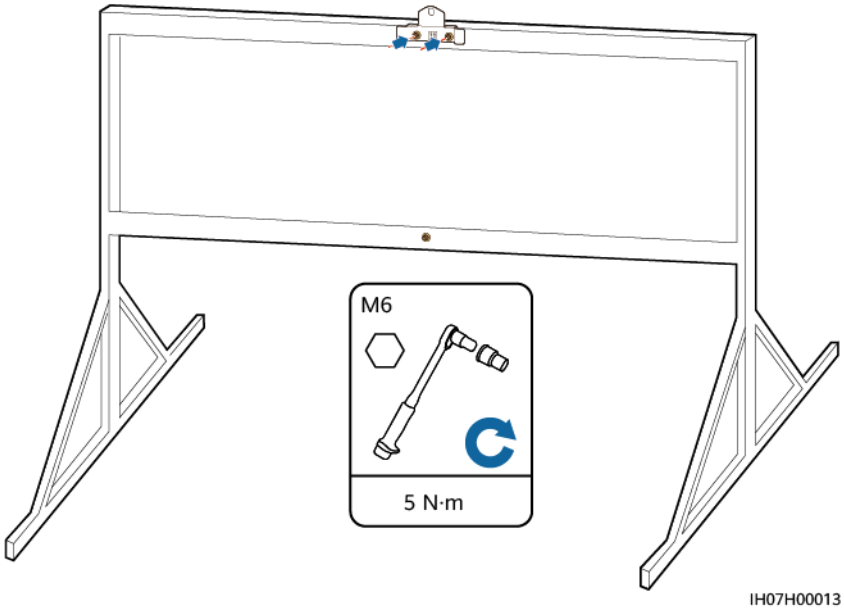

NOTE

Prepare bolt assemblies based on the hole diameter of the mounting bracket.

Step 4 Install the inverter on the mounting bracket.

Step 5 Tighten the bolt assemblies.

Figure 4-14 Tightening the bolt assemblies

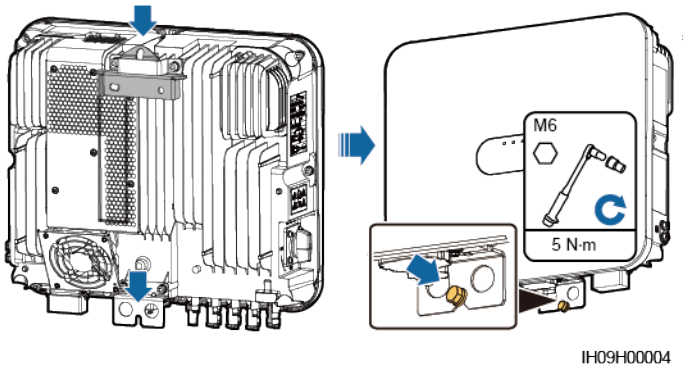

Step 6 (Optional) Install an anti-theft lock.

NOTICE

- Prepare an anti-theft lock suitable for the lock hole diameter (Φ10 mm).
- An outdoor waterproof lock is recommended.
- Keep the key to the anti-theft lock.

Figure 4-15 Installing an anti-theft lock

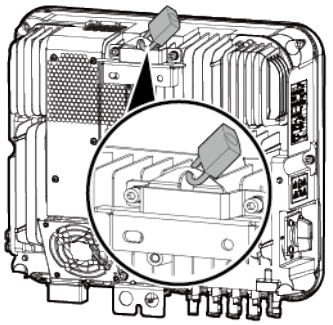

----End

5 Electrical Connections

5.1 Precautions

DANGER

When exposed to sunlight, the PV arrays supply DC voltage to the inverter. Before connecting cables, ensure that all **DC SWITCH** on the inverter are OFF. Otherwise, the high voltage of the inverter may result in electric shocks.

DANGER

- The site must be equipped with qualified fire fighting facilities, such as fire sand and carbon dioxide fire extinguishers.
- Wear personal protective equipment and use dedicated insulated tools to avoid electric shocks or short circuits.

WARNING

- The equipment damage caused by incorrect cable connections is beyond the warranty scope.
- Only certified electrician can perform electrical terminations.
- Operation personnel must wear PPE when connecting cables.
- Before connecting cables to ports, leave enough slack to reduce the tension on the cables and prevent poor cable connections.

 Copyright © Huawei Digital Power Technologies Co., Ltd.

CAUTION

- Stay away from the equipment when preparing cables to prevent cable scraps from entering the equipment. Cable scraps may cause sparks and result in personal injury and equipment damage.

NOTE

The cable colors shown in the electrical connection diagrams provided in this section are for reference only. Select cables in accordance with local cable specifications (green-and-yellow cables are only used for protective earthing).

5.2 Preparing Cables

Figure 5-1 SUN2000 cable connections (the components in dashed boxes are optional)

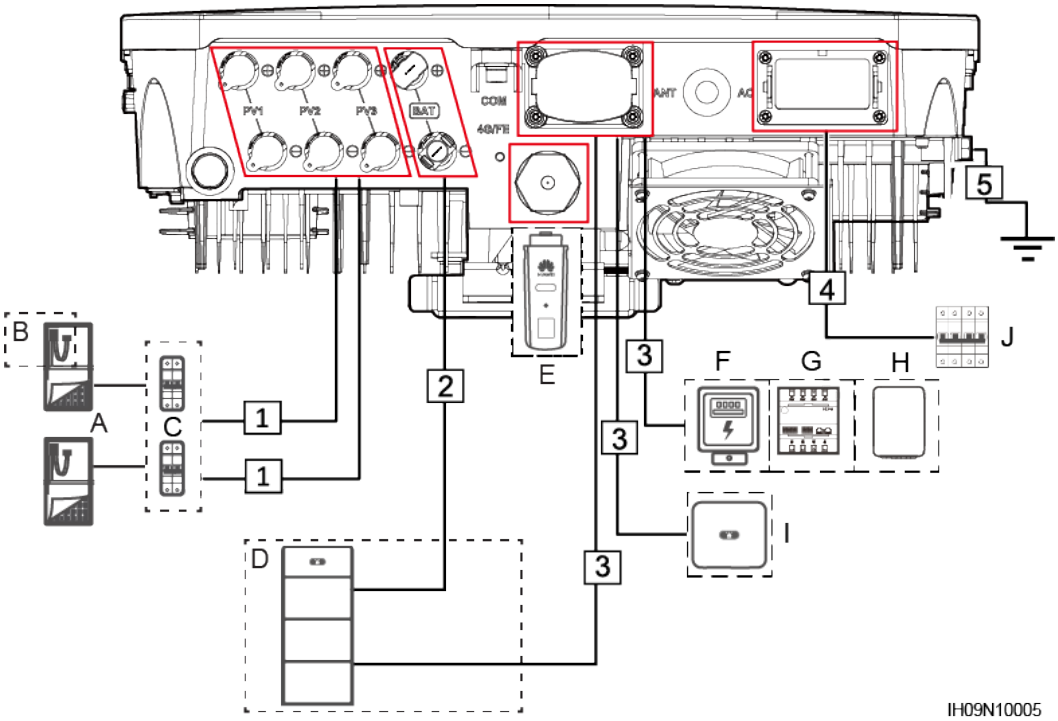

Table 5-1 Component description

No.	Component	Description	Source
A	PV module	• A PV string consists of PV modules connected in series. • The inverter supports three PV string inputs.[1]	Prepared by the customer

 Copyright © Huawei Digital Power Technologies Co., Ltd.

No.	Component	Description	Source
B	Smart PV Optimizer[2]	The supported Smart PV Optimizer models are SUN2000-450W-P, SUN2000-450W-P2, and SUN2000-600W-P.	Purchased from Huawei
C	DC switch	Recommended: a DC circuit breaker with a rated voltage greater than or equal to 600 V DC and a rated current of 20 A	Prepared by the customer
D	Battery	The inverter can connect to the LUNA2000.	Purchased from Huawei
E	Smart Dongle[3]	Supported models: ● WLAN-FE Smart Dongle: SDongleA-05 ● 4G Smart Dongle: SDongleB-06[4]	Purchased from Huawei
F	Power meter[5]	The recommended power meter models are DDSU666-H, YDS70-C16, DDSU71 and DDSU1079-CT[6].	Purchased from Huawei
G	EMMA[7]	An energy management device used in a residential PV system. The models are EMMA-A01 and EMMA-A02.	Purchased from Huawei
H	SmartGuard[8]	The SmartGuard can be used to switch the inverter between on-grid and off-grid states. The models are SmartGuard-63A-S0 and SmartGuard-63A-AUS0.	Purchased from Huawei
I	SUN2000	In the inverter cascading scenario, the master and slave inverters are both SUN2000-(8K, 10K)-LC0, and a maximum of three inverters can be cascaded.	Purchased from Huawei

 Copyright © Huawei Digital Power Technologies Co., Ltd.

No.	Component	Description	Source
J	AC switch	To ensure that the inverter can be safely disconnected from the power grid when an exception occurs, connect an AC switch to the AC side of the inverter. Select an appropriate AC switch in accordance with local industry standards and regulations. Huawei recommends the following switch specifications: a single-phase AC circuit breaker with a rated voltage greater than or equal to 250 V AC and a rated current of: ● 50 A for the 8K inverter ● 63 A for the 10K inverter	Prepared by the customer

Note [1]: Do not connect only one PV string to the inverter..

Note [2]: For details about how to operate the Smart PV Optimizer, see **SUN2000-(600W-P, 450W-P2) Smart PV Optimizer Quick Guide**, **SUN2000-450W-P Smart PV Optimizer Quick Guide**, and **SUN2000 Smart PV Optimizer User Manual**.

Note [3]: For details about how to operate a WLAN-FE Smart Dongle SDongleA-05, see **SDongleA-05 Smart Dongle Quick Guide (WLAN-FE)**. For details about how to operate a 4G Smart Dongle SDongleB-06, see **SDongleB-06 Smart Dongle Quick Guide (4G)**. You can obtain these documents at **https://support.huawei.com/enterprise** by searching for models.

Note [4]: When the SDongleB-06-CN (02314ALM-001) Smart Dongle is used, a maximum of two inverters can be cascaded.

Note [5]: For details about how to operate a power meter, see **DDSU666-H Smart Power Sensor User Manual** and **YDS70-C16 Smart Power Sensor Quick Guide**.

Note [6]:

- Retain the default baud rates for the power meters. If they are changed, the power meters may go offline, generate alarms, or affect the inverter output power.
- SUN2000LC V100R023C10SPC101 and later versions can connect to the DDSU71 and DDSU1079-CT power meter.

Note [7]: For details about how to operate an EMMA, see **EMMA-(A01, A02) Quick Guide**.

Note [8]: For details about how to operate a SmartGuard, see **SmartGuard-63A-(S0, AUS0) Quick Guide**.

 Copyright © Huawei Digital Power Technologies Co., Ltd.

Table 5-2 Cable description

No.	Cable	Type	Recommended Specifications	Source
1	DC input power cable	Common outdoor PV cable in the industry	• Conductor cross-sectional area: 4–6 mm^2 • Cable outer diameter: 5.9–8.8 mm	Prepared by the customer
2	(Optional) Battery cable	Common outdoor PV cable in the industry	• Conductor cross-sectional area: 4–6 mm^2 • Cable outer diameter: 5.5–9 mm	Prepared by the customer
3	(Optional) Signal cable	Outdoor shielded twisted pair cable	• Conductor cross-sectional area: – Combined crimping of cables on the port: 0.2–0.35 mm^2 – Crimping the cables on the port without combining them: 0.2–1 mm^2 • Cable outer diameter: 4–8 mm	Prepared by the customer
4	AC output power cable[a]	Using the PE equipotential bonding point at the AC output port: three-core (L, N, and PE) outdoor copper cable	• Conductor cross-sectional area: – 8K inverter: 8–10 mm^2 – 10K inverter: 10 mm^2 • Cable outer diameter: 16–21 mm	Prepared by the customer
5	PE cable	Single-core outdoor copper cable and M6 OT terminal	10 mm^2	Prepared by the customer

No.	Cable	Type	Recommended Specifications	Source
Note a: The minimum cross-sectional area should be determined based on the rated value of the AC fuse.				

NOTE

- The minimum cable cross-sectional area must meet local standards.
- The factors to be considered in cable selection include the rated current, cable type, routing mode, ambient temperature, and maximum acceptable line loss.

5.3 Connecting a PE Cable

Precautions

DANGER

- Ensure that the PE cable is securely connected. Otherwise, electric shocks may occur.
- Do not connect the neutral wire to the enclosure as a PE cable. Otherwise, electric shocks may occur.

NOTE

- The PE point at the AC output port is used only as a PE equipotential bonding point, and cannot substitute for the PE point on the enclosure.
- It is recommended that silicone grease or paint be applied around the ground terminal after the PE cable is connected.

Additional Information

The inverter provides the grounding detection function. This function is used to check whether the inverter is properly grounded before the inverter starts, or check whether the ground cable is disconnected when the inverter is running. This function is only available under limited conditions. To ensure the safe operation of the inverter, properly ground the inverter according to the connection requirements of the PE cable. For some power grid types, if the output side of the inverter is connected to an isolation transformer, ensure that the inverter is properly grounded and then set **Grounding Exception Detection** to **Disable** so that the inverter can run properly.

- According to IEC 62109, to ensure the safe operation of the inverter in the case of PE cable damage or disconnection, properly connect the PE cable of the inverter and ensure that it meets at least one of the following requirements before the grounding detection function becomes invalid.

- If the PE terminal of the AC connector is not connected, the PE cable on the enclosure must be a single-core outdoor copper cable with a cross-sectional area of at least 10 mm^2.
- Use cables with the same diameter as the AC output power cable and ground the PE terminal on the AC connector and the ground screws on the enclosure.

- In some countries and regions, the inverter must have additional ground cables. In this case, use cables with the same diameter as the AC output power cable to ground the PE terminal of the AC connector and the ground screws of the enclosure, respectively.

Procedure

Step 1 Crimp an OT terminal.

NOTICE

- Avoid scratching the core wire when stripping a cable.
- The cavity formed after the conductor crimp strip of the OT terminal is crimped must wrap the core wire completely. The core wire must make close contact with the OT terminal.
- Wrap the wire crimping area with heat shrink tubing or insulation tape. The heat shrink tubing is used as an example.
- Use a heat gun carefully to avoid heat damage to the equipment.

Figure 5-2 Crimping an OT terminal

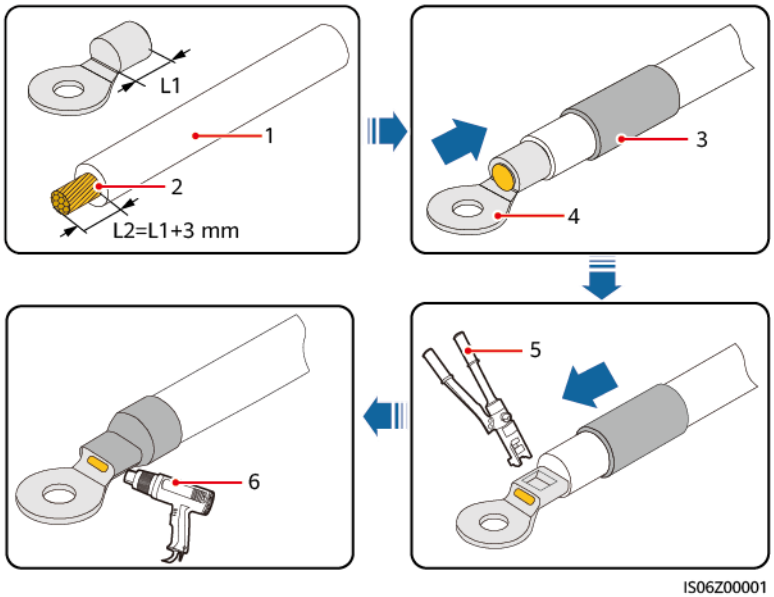

(1) Cable (2) Core wire (3) Heat shrink tubing

(4) OT terminal (5) Hydraulic pliers (6) Heat gun

Step 2 Connect the PE cable.

Figure 5-3 Connecting the PE cable

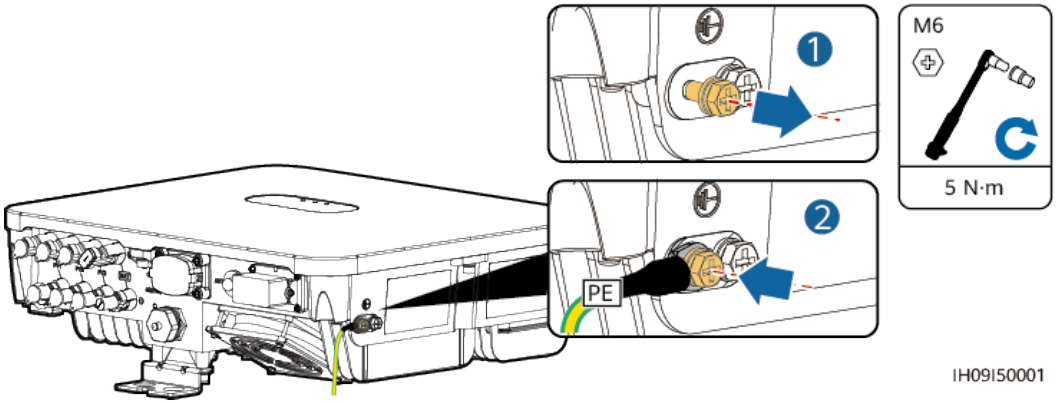

----End

5.4 Connecting an AC Output Power Cable

Precautions

An AC switch should be installed on the AC side of the inverter. To ensure that the inverter can safely disconnect itself from the power grid when an exception occurs, select a proper overcurrent protection device in compliance with local power distribution regulations.

WARNING

- Do not connect loads between an inverter and an AC switch that directly connects to the inverter. Otherwise, the switch may trip by mistake.
- If an AC switch is used with specifications beyond local standards, regulations, or the Company's recommendations, the switch may fail to turn off in a timely manner in case of exceptions, causing serious faults.

CAUTION

Each inverter shall be equipped with an AC output switch. Multiple inverters shall not connect to the same AC switch.

The inverter is installed with an integrated monitoring unit for residual current. When the inverter detects that residual current exceeds the permitted value, it disconnects from the power grid quickly.

 Copyright © Huawei Digital Power Technologies Co., Ltd.

NOTICE

- If the external AC switch provides the leakage protection function, the rated leakage tripping current must be greater than or equal to 100 mA.
- If multiple inverters are connected to the master leakage protection device through their AC switches, the rated leakage tripping current of the device must be greater than or equal to the number of inverters x 100 mA.
- The AC switch cannot be a knife switch.

Procedure

Step 1 Connect the AC output power cable to the AC connector.

NOTICE

- The PE point at the AC output port is used only as a PE equipotential point, and cannot substitute for the PE point on the enclosure.
- Keep the AC output power cable and the PE cable close to each other.
- Keep the AC output power cable and the DC input power cable close to each other.
- Ensure that the cable jacket is inside the connector.
- Ensure that the exposed core is totally inserted into the cable hole.
- Ensure that AC output cable is secured. Failing to do so may cause device malfunction or damage to its AC connector.
- Ensure that the cable is not twisted.

NOTICE

Strip the insulation layers of the AC output power cable by the recommended length (17–19 mm) and crimp the cable conductors with the delivered cord end terminals. Ensure that the cord end terminals are completely inside the conductor insertion points. Tighten the cable conductors to a torque of 2.8–3.2 N·m. Otherwise, the device may fail to run properly or be damaged during operation.

 Copyright © Huawei Digital Power Technologies Co., Ltd.

Figure 5-4 Installing the AC power cable

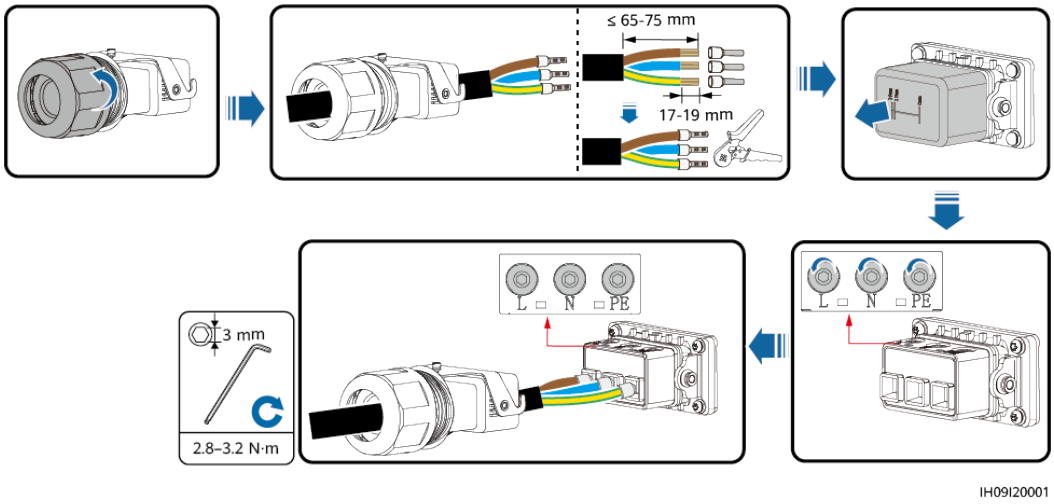

NOTE

The cable colors shown in the figures are for reference only. Select an appropriate cable according to the local standards.

Step 2 Connect the AC connector to the AC output port.

NOTICE

Ensure that the AC connector is connected securely.

Figure 5-5 Securing the AC connector

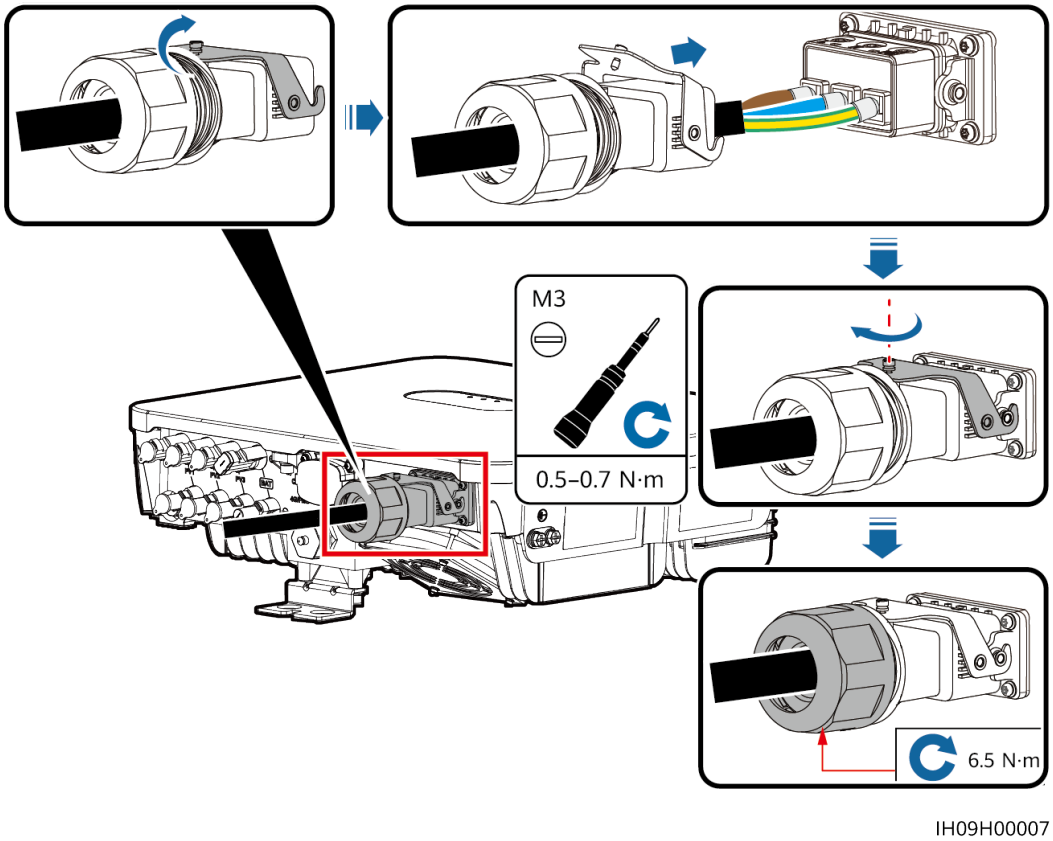

Step 3 Check the route of the AC output power cable.

Figure 5-6 Cabling requirements

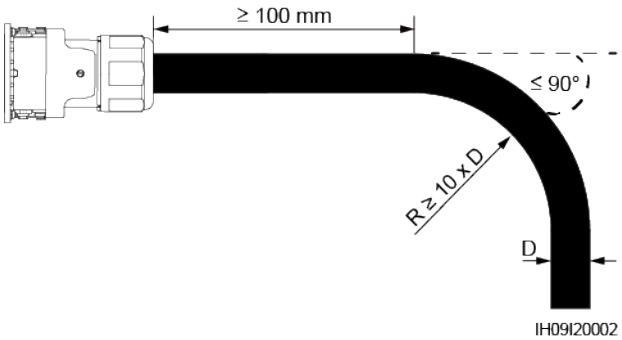

----End

Disconnection

Perform the steps in reverse order to disconnect the cable.

5.5 Connecting DC Input Power Cables

Precautions

DANGER

- Before connecting the DC input power cables, ensure that the DC voltage is within the safe range (lower than 60 V DC) and that the DC switch on the inverter is OFF. Failing to do so may result in electric shocks.
- When the inverter is running, it is not allowed to work on the DC input power cables, such as connecting or disconnecting a PV string or a PV module in a PV string. Failing to do so may cause electric shocks.
- If no PV string connects to a DC input terminal of the inverter, do not remove the watertight cap from the DC input terminals. Otherwise, the IP rating of the inverter will be affected.

WARNING

Ensure that the following conditions are met. Otherwise, the inverter may be damaged, or even a fire could happen.

- The DC input voltage of the inverter shall not exceed maximum input voltage under any circumstance.
- The polarities of electric connections are correct on the DC input side. The positive and negative terminals of a PV string connect to corresponding positive and negative DC input terminals of the inverter.
- If the DC input power cables are reversely connected, do not operate the DC switch as well as positive and negative connectors immediately. Wait until the night when solar irradiance declines and the PV string current drops to below 0.5 A. Then set the DC switch to the OFF position, remove the positive and negative connectors, and correct the polarities of the DC input power cables.

WARNING

During the installation of PV strings and the inverter, the positive or negative terminals of PV strings may be short-circuited to ground if the power cables are not properly installed or routed. In this case, an AC or DC short circuit may occur and damage the inverter. The resulting device damage is not covered under any warranty.

 Copyright © Huawei Digital Power Technologies Co., Ltd.

NOTICE

Since the output of the PV string connected to the inverter cannot be grounded, ensure that the PV module output is well insulated to ground.

Terminal Description

Figure 5-7 DC input terminals

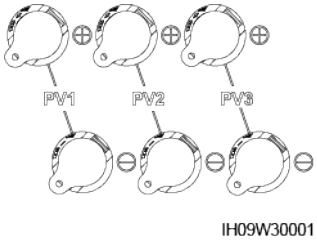

Figure 5-8 Connection

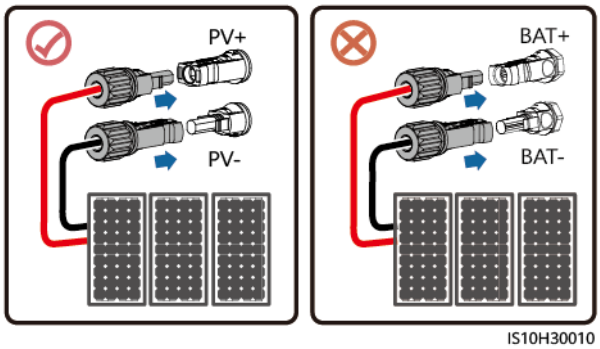

Procedure

Step 1 Assemble DC connectors.

CAUTION

Use the positive and negative metal terminals and DC connectors delivered with the inverter. Using incompatible positive and negative metal terminals and DC connectors may result in serious consequences. The caused device damage is not covered under any warranty or service agreement.

 Copyright © Huawei Digital Power Technologies Co., Ltd.

NOTICE

- Keep the DC input PV+ cable and PV– cable close to each other.
- Cables with high rigidity, such as armored cables, are not recommended as DC input power cables, because poor contact may be caused by the bending of the cables.
- Before assembling DC connectors, label the cable polarities correctly to ensure correct cable connections.
- After crimping the positive and negative metal terminals, pull the DC input power cables back to ensure that they are connected securely.
- Insert the crimped metal terminals of the positive and negative power cables into the appropriate positive and negative connectors. Then pull back the DC input power cables to ensure that they are connected securely.
- During DC input power cabling, leave at least 50 mm of slack. The axial tension on PV connectors must not exceed 80 N. Radial stress or torque must not be generated on PV connectors.

Figure 5-9 Assembling DC connectors

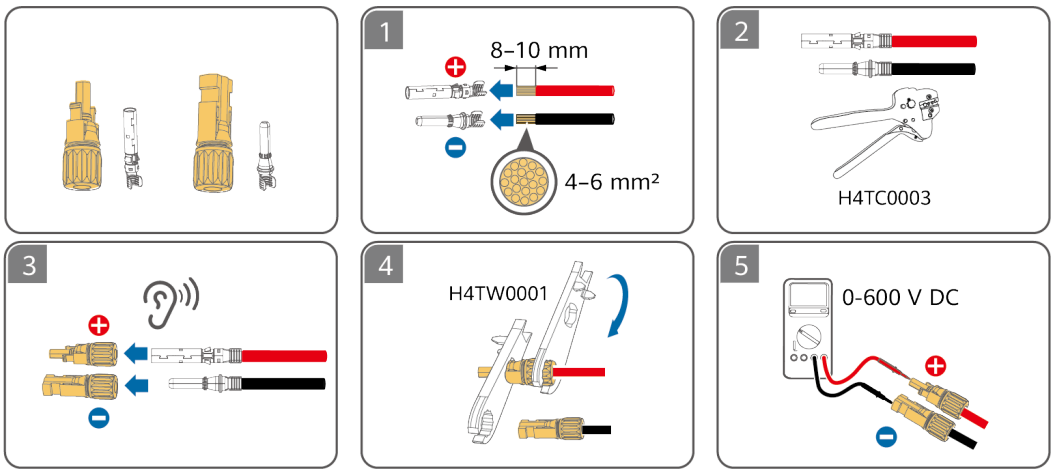

NOTE

- If the PV string is not configured with an optimizer, use a multimeter to measure the voltage at the DC position. The multimeter must have a DC voltage range of at least 600 V. If the voltage is a negative value, the DC input polarity is incorrect and needs correction. If the voltage is greater than 600 V, too many PV modules are configured to the same string. Remove some PV modules.
- If the PV string is configured with an optimizer, check the cable polarity by referring to the Smart PV optimizer quick guide.

WARNING

Before performing **Step 2**, ensure that the **DC SWITCH** is set to **OFF**.

Step 2 Insert the positive and negative connectors into corresponding DC input terminals on the inverter.

 Copyright © Huawei Digital Power Technologies Co., Ltd.

NOTICE

After the positive and negative connectors snap into place, pull the DC input power cables back to ensure that they are connected securely.

NOTICE

During DC input power cabling, leave at least 50 mm of slack. The axial tension on PV connectors must not exceed 80 N. Radial stress or torque must not be generated on PV connectors.

Figure 5-10 Connecting DC input power cables

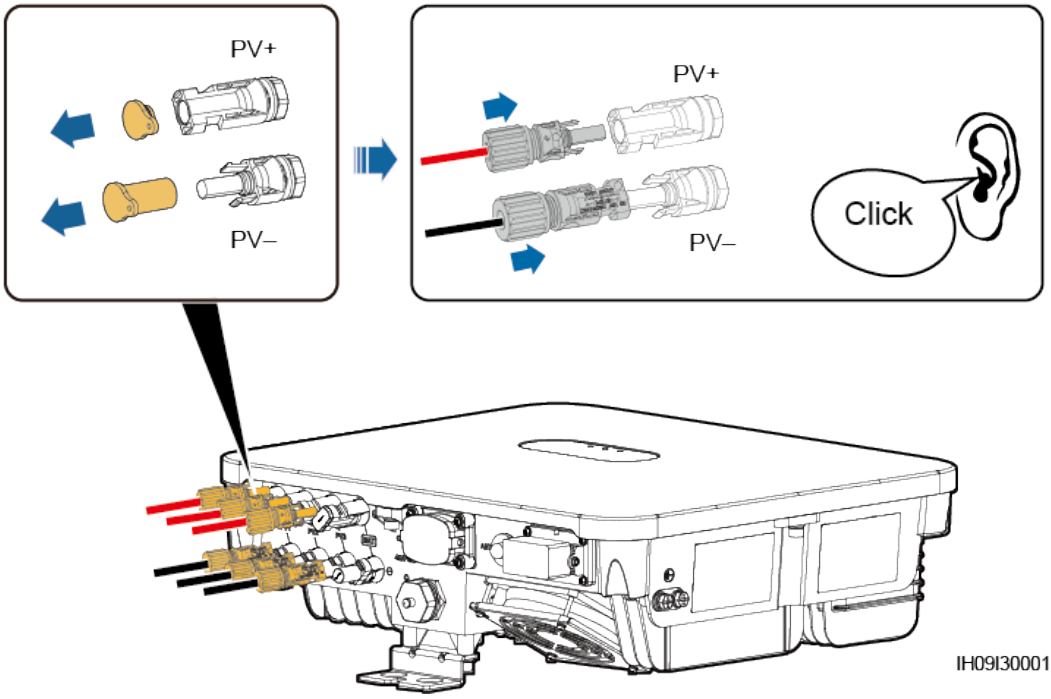

NOTICE

If the DC input power cable is reversely connected and the DC switch is set to ON, do not immediately turn off the DC switch or reconnect the positive and negative connectors. Otherwise, the device may be damaged. The caused device damage is not covered under any warranty or service agreement. Wait until the night when solar irradiance declines and the PV string current drops to below 0.5 A. Then set the DC switch to the OFF position, remove the positive and negative connectors, and correct the polarities of the DC input power cables.

----End

 Copyright © Huawei Digital Power Technologies Co., Ltd.

Removing DC Connectors

WARNING

Before removing the positive and negative connectors, ensure that the DC SWITCH is set to OFF.

To remove the positive and negative connectors from the inverter, insert an open-end wrench into the notch and press the wrench with an appropriate force.

Figure 5-11 Removing a DC connector

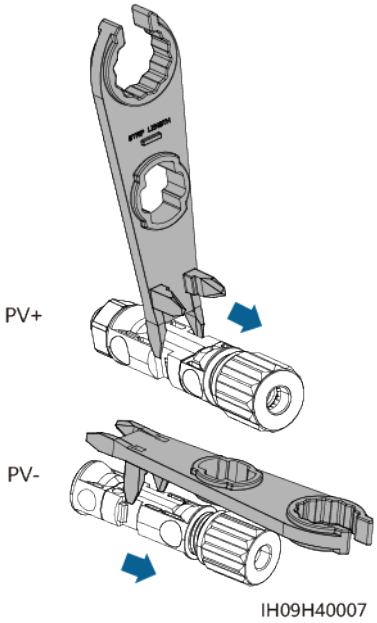

5.6 (Optional) Connecting Battery Cables

Prerequisites

 Copyright © Huawei Digital Power Technologies Co., Ltd.

DANGER

- Battery short circuits may cause personal injury. The high transient current generated by a short circuit may release a surge of power and cause fire.
- Do not connect or disconnect the battery cable when the inverter is running. Failing to do so may cause electric shocks.
- Before connecting the battery cables, ensure that the DC switch on the inverter and all the switches connecting to the inverter are OFF, and the inverter has no residual electricity. Otherwise, the high voltage of the inverter and battery may result in electric shocks.
- If no battery connects to the inverter, do not remove the watertight cap from the battery terminal. Otherwise, the IP rating of the inverter will be affected. If a battery connects to the inverter, set aside the watertight cap. Reinstall the watertight cap immediately after removing the connector. The high voltage of the battery terminal may result in electric shocks.

A battery switch can be configured between the inverter and the battery to ensure that the inverter can be safely disconnected from the battery.

WARNING

- Do not connect loads between the inverter and the battery.
- The battery cables should be connected correctly. That is, the positive and negative terminals of the battery connect to the positive and negative battery terminals on the inverter respectively. Otherwise, the inverter may be damaged, or even a fire could happen.

WARNING

During the installation of the ESS and the inverter, the positive or negative terminal of the ESS may be short-circuited to ground if the power cables are not properly installed or routed. In this case, an AC or DC short circuit may occur and damage the devices. The resulting device damage is not covered under any warranty.

NOTICE

The cabling distance between the battery and the inverter should be less than or equal to 10 meters, and within 5 meters is recommended.

Procedure

Step 1 Assemble the positive and negative connectors by referring to **5.5 Connecting DC Input Power Cables**.

 Copyright © Huawei Digital Power Technologies Co., Ltd.

DANGER

- The battery voltage will result in serious injury. Use dedicated insulation tools to connect cables.
- Ensure that cables are correctly connected between the battery terminal and the battery switch, and between the battery switch and the inverter battery terminal.

NOTICE

Cables with high rigidity, such as armored cables, are not recommended as battery cables, because poor contact may be caused by the bending of the cables.

Step 2 Insert the positive and negative connectors into corresponding battery terminals of the inverter.

NOTICE

After the positive and negative connectors snap into place, pull the battery cables back to ensure that they are connected securely.

Figure 5-12 Connecting battery cables

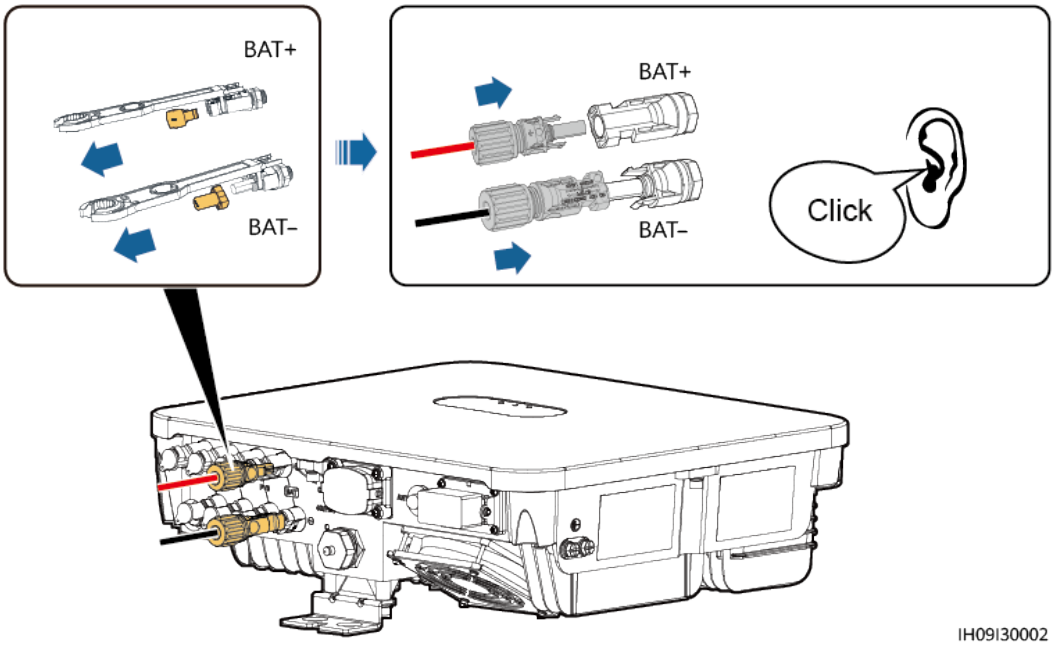

----End

5.7 Connecting Signal Cables

COM Port Pin Definitions

NOTICE

- When laying out a signal cable, separate it from power cables and keep it away from strong interference sources to prevent communication interruption.
- Ensure that the protection layer of the signal cable is inside the connector, surplus core wires are cut off from the protection layer, the exposed core wires are inserted completely into the holes, and the cable is connected securely.
- If the Smart Dongle is configured, you are advised to install the Smart Dongle before connecting the signal cable.

Figure 5-13 Pin definitions

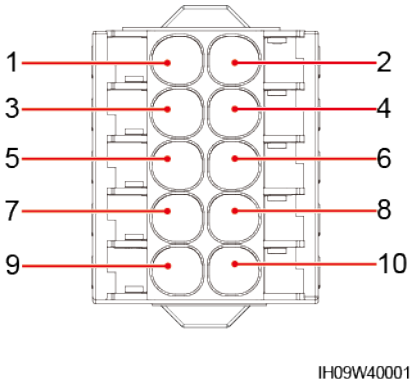

Pin	Definition	Function	Description
1	485B1	RS485B, RS485 differential signal–	Used for cascading inverters or connecting to the RS485 signal port of the EMMA or SmartGuard. When cascaded inverters and the EMMA coexist, they share the 485B1 and 485A1 ports. **NOTE** Inverters cannot be cascaded in the SmartGuard networking.
2	485A1	RS485A, RS485 differential signal+	
3	485B2	RS485B, RS485 differential signal–	Used to connect to the RS485 signal ports on the batteries and power meters. When batteries and power meters coexist, they share the 485B2 and 485A2 ports.
4	485A2	RS485A, RS485 differential signal+	
5	GND	GND	Used to connect to the GND of the enable signal of the battery.

 Copyright © Huawei Digital Power Technologies Co., Ltd.

Pin	Definition	Function	Description
6	EN+	Enable signal	Used to connect to the enable signal of the battery.
7	DI1	Digital input signal 1+	Used to connect to the positive terminal of DI1. It can connect to the DRM0 scheduling signal or serve as a port for rapid shutdown signals.
8	DI2	Digital input signal 2+	Used to connect to the positive terminal of DI2. Used as the feedback signal port for the SmartGuard
9	GND	GND	Used to connect to the GND of the DI1/DI2 port.
10	PE	Shield layer grounding	-

Communication Networking Mode

- Smart Dongle networking

Figure 5-14 Smart Dongle networking (the components in the dashed box are optional)

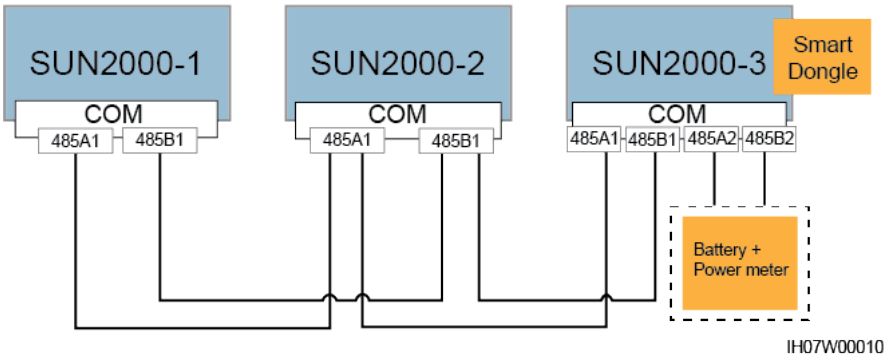

NOTE

- The power meter and the Smart Dongle must be connected to the same inverter.
- In the preceding networking, the inverters are cascaded and support the grid-tied point control function to achieve zero export.
- If the inverters require the grid-tied point control function, they need to be connected to a power meter.

- EMMA networking

Figure 5-15 EMMA networking (the component in the dashed box is optional)

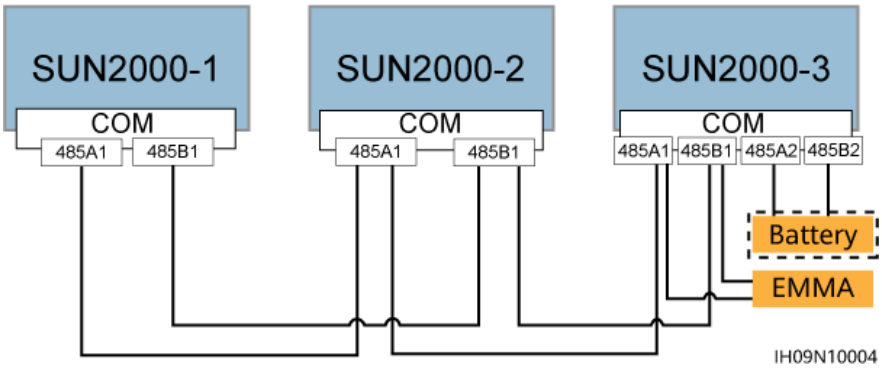

- SmartGuard networking

Figure 5-16 SmartGuard networking (the components in dashed boxes are optional)

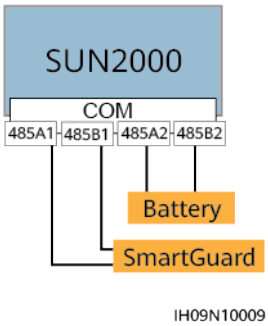

Requirements for Signal Cables

NOTICE

- Ensure that the protection layer of the cable is in the connector. The surplus core should be cut off from the protection layer.
- Ensure that the exposed core is totally inserted into the cable hole.
- Ensure that the signal cables are connected securely.
- Ensure that the cables are not twisted.
- If multiple signal cables need to be connected to a single connector, ensure that the outer diameters of the signal cables are the same.

 Copyright © Huawei Digital Power Technologies Co., Ltd.

Figure 5-17 Crimping two signal cables

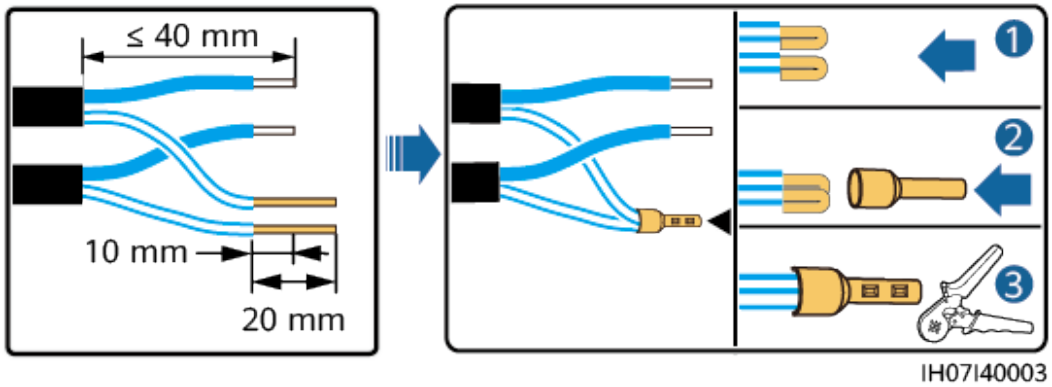

Requirements for Installing the Signal Cable Connector Block

When you install a connector block in the inverter, align the top of the connector block with the outer edge of the COM port, as shown in the following figure.

Figure 5-18 Installing the connector block

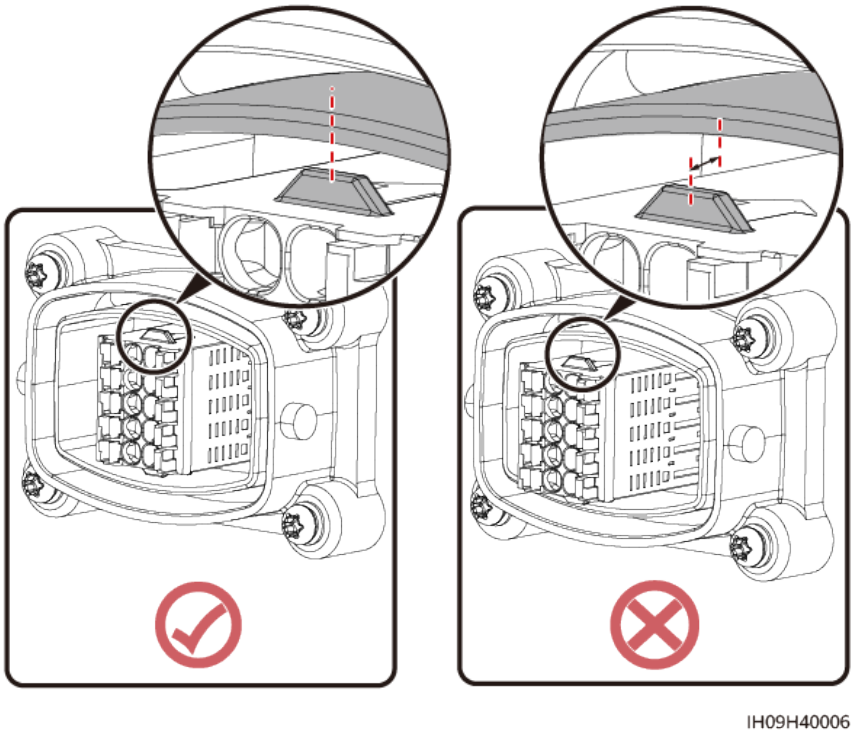

5.7.1 Connecting RS485 Communications Cables (Inverter Cascading)

Procedure

Step 1 Connect the signal cable to the signal cable connector block.

 Copyright © Huawei Digital Power Technologies Co., Ltd.

Figure 5-19 Installing the cable

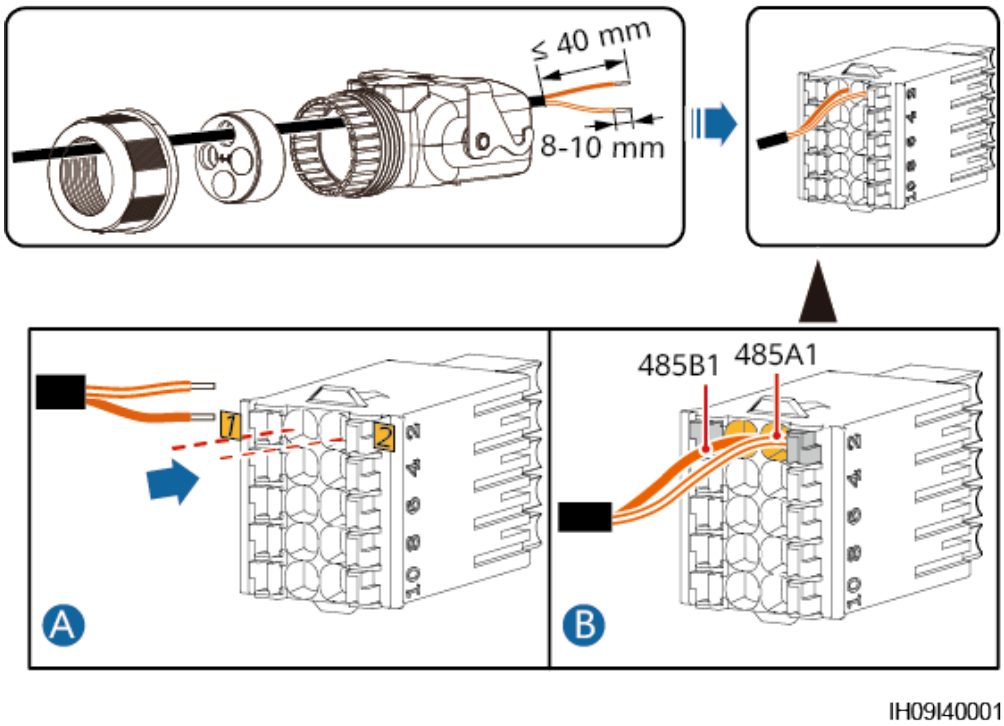

Step 2 Connect the signal cable connector to the COM port.

Figure 5-20 Securing the signal cable connector

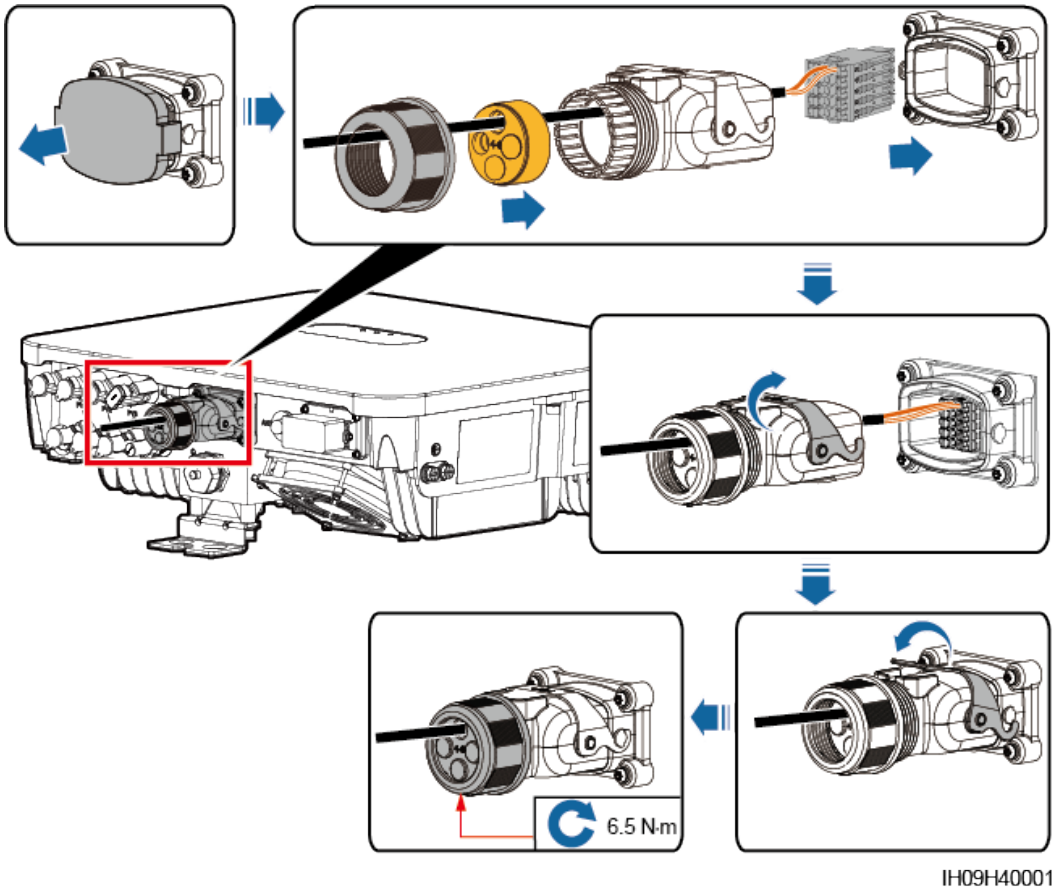

----End

5.7.2 Connecting RS485 Communications Cables (EMMA and Battery)

Cable Connections

The following figure shows the cable connections between the inverter and the EMMA.

Figure 5-21 Connecting cables to the EMMA

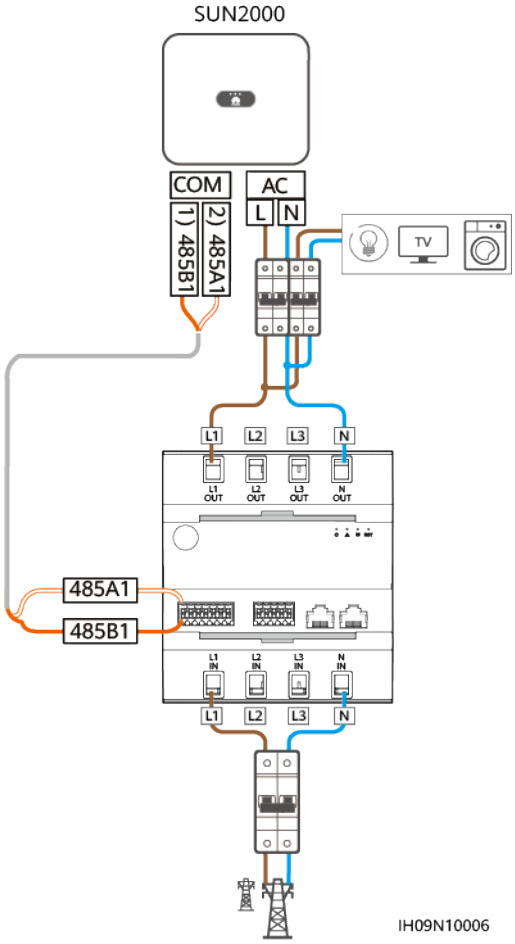

Procedure

Step 1 Connect the signal cable to the signal cable connector block.

- Connecting the inverter to the EMMA

Figure 5-22 Installing the cable (connecting to the EMMA)

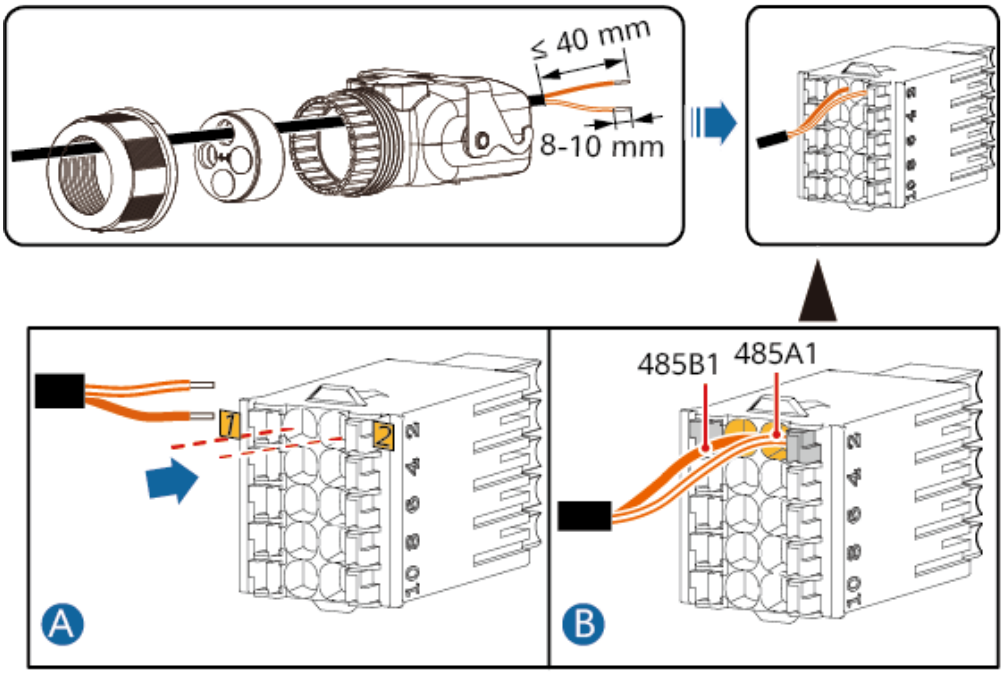

IH09I40001

- Connecting the EMMA and battery to the inverter

Figure 5-23 Installing cables (connecting to the EMMA and battery)

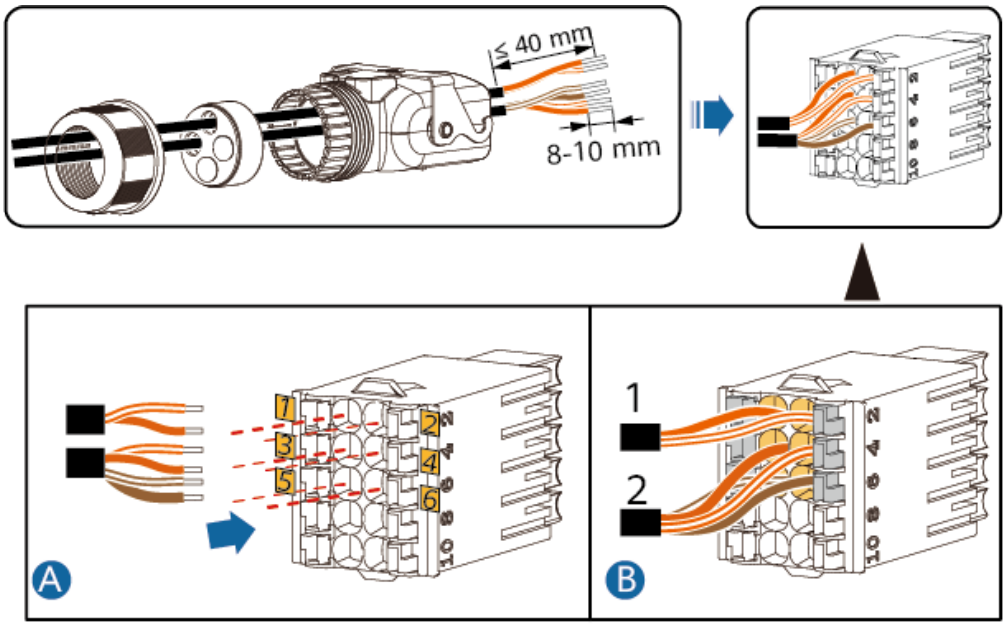

IH09I40002

Table 5-3 Cable connections

Cable		Pin	Definition	To	
1	—	1	485B1	EMMA	485B1

 Copyright © Huawei Digital Power Technologies Co., Ltd.

Cable		Pin	Definition	To	
		2	485A1		485A1
2		3	485B2	Battery	485B
		4	485A2		485A
		5	GND		Enable-
		6	EN+		Enable+

Step 2 Connect the signal cable connector to the COM port.

Figure 5-24 Securing the signal cable connector

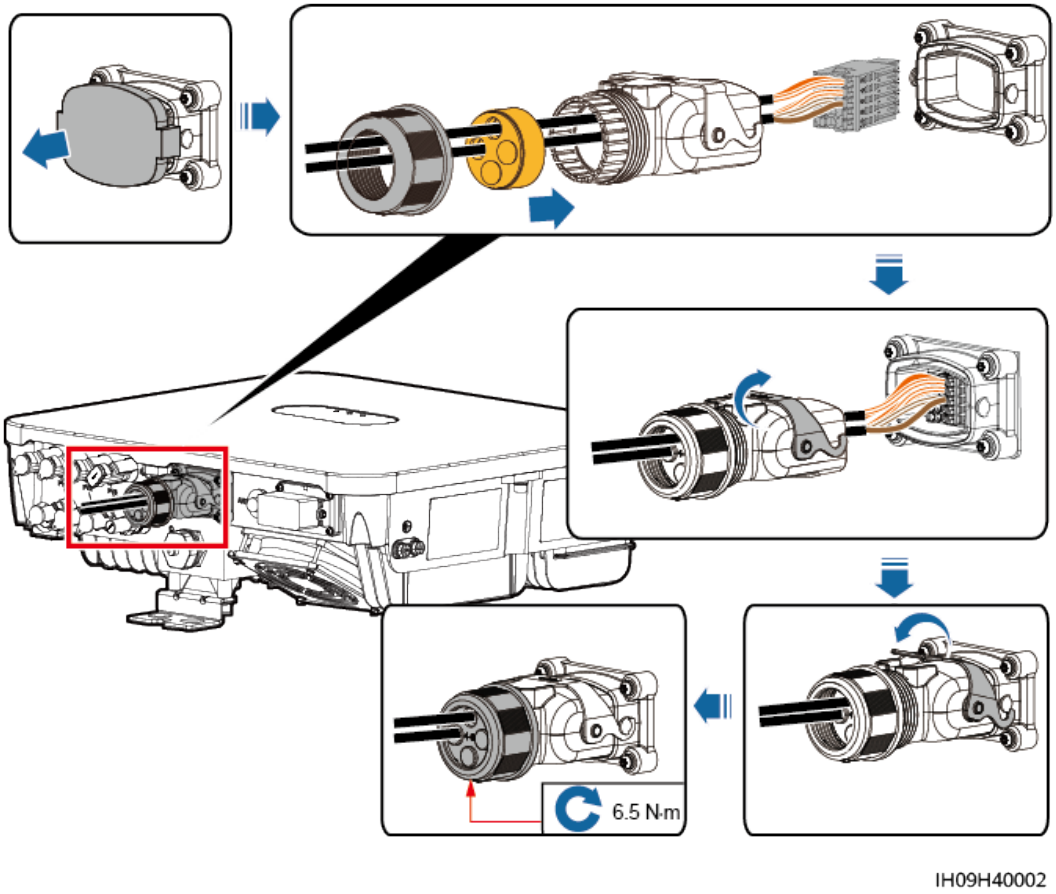

----End

5.7.3 Connecting RS485 Communications Cables (SmartGuard and Battery)

Cable Connections

The following figure shows the cable connections between the inverter and the SmartGuard.

Figure 5-25 Connecting cables to the SmartGuard

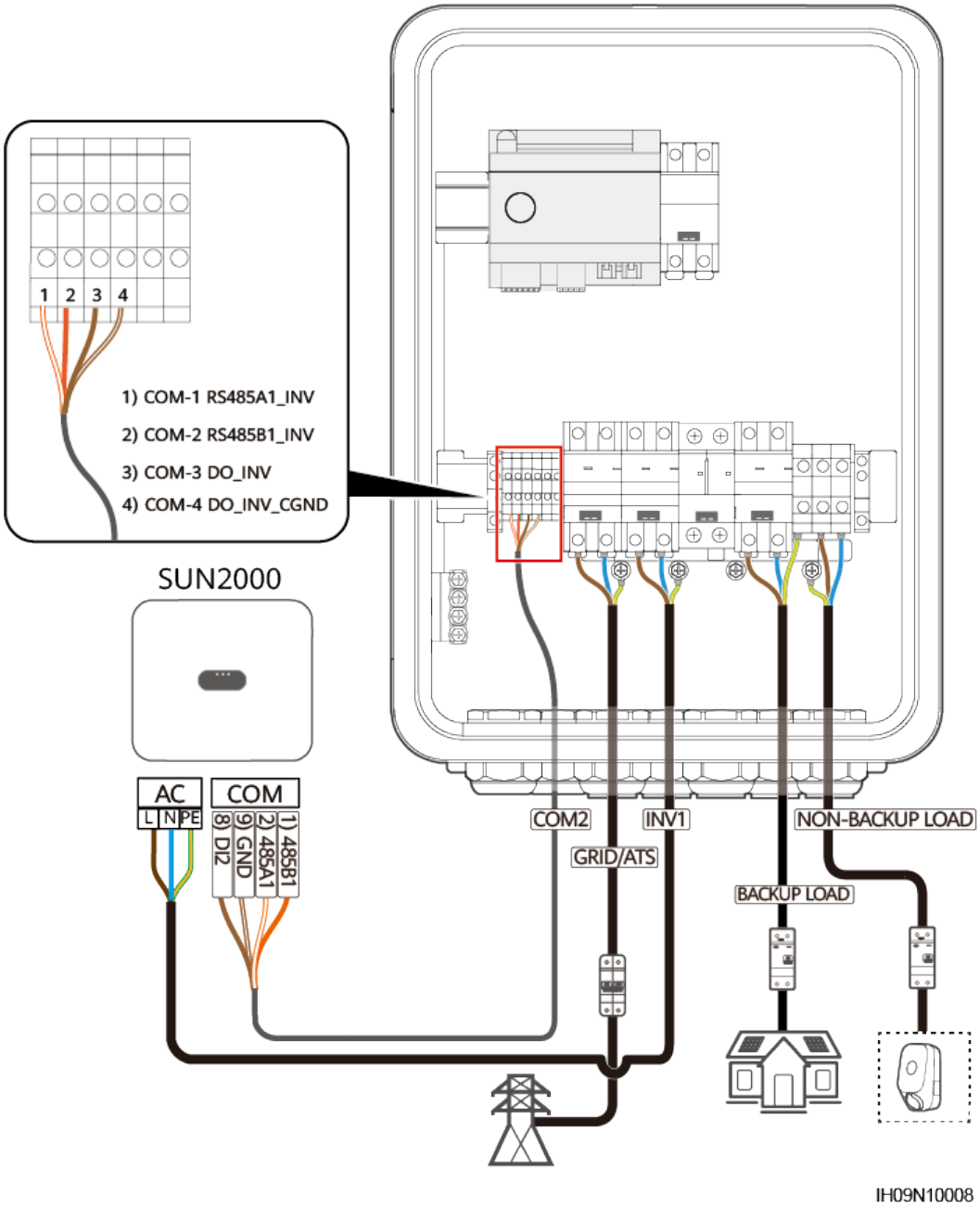

Procedure

Step 1 Connect the signal cable to the signal cable connector block.

- Connecting the inverter to the SmartGuard

Figure 5-26 Installing the cable (connecting to the SmartGuard)

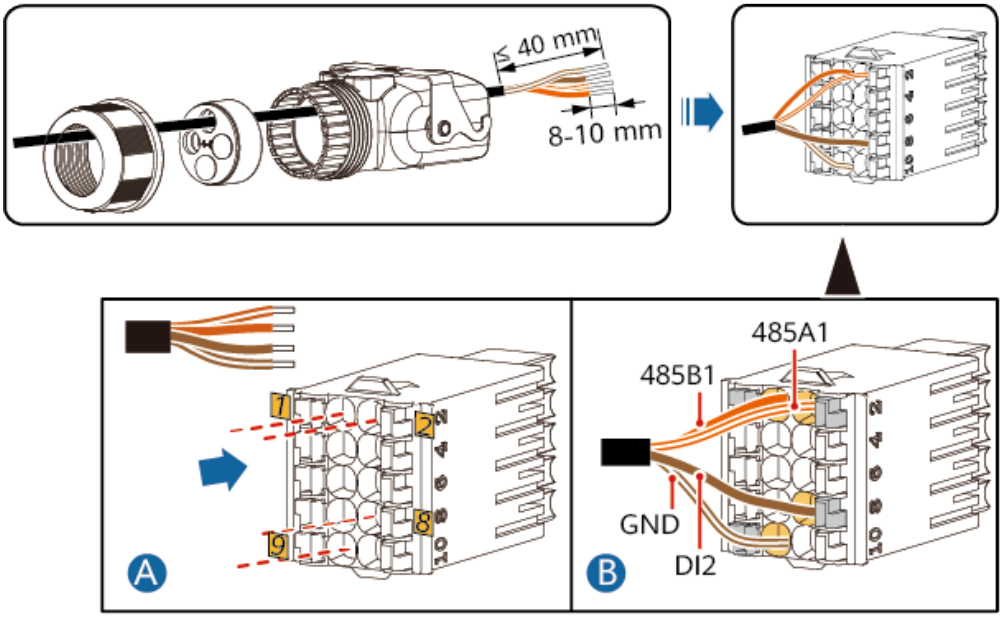

- Connecting the inverter to the SmartGuard and battery

Figure 5-27 Installing cables

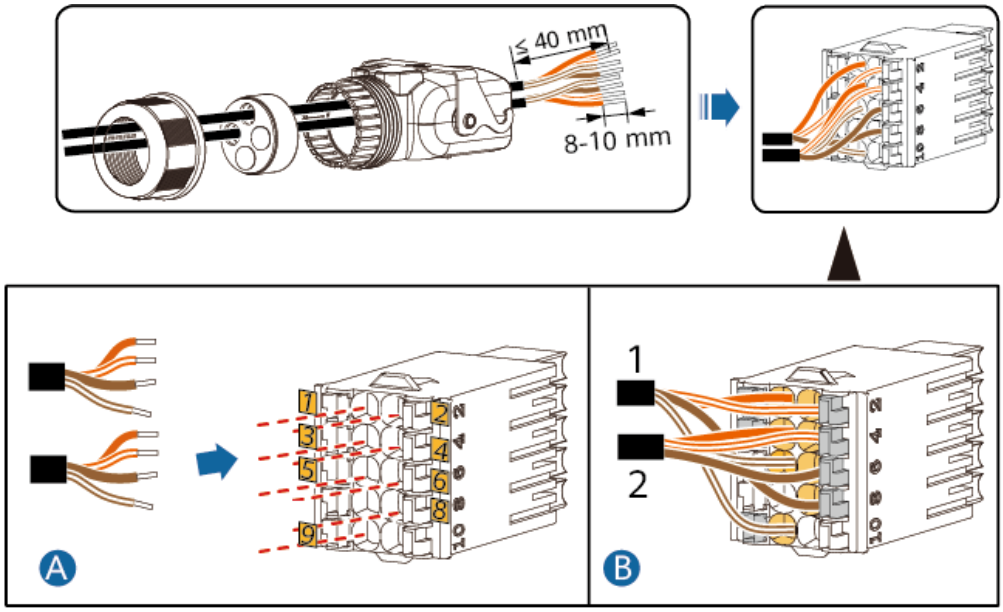

Table 5-4 Cable connections

Cable		Pin	Definition	To	
1	—	1	485B1	SmartGuard	COM-2 RS485B1_INV

Cable		Pin	Definition	To	
		2	485A1		COM-1 RS485A1_INV
		9	GND		COM-4 DO_INV_CGND
		8	DI2		COM-3 DO_INV
2		3	485B2	Battery	485B
		4	485A2		485A
		5	GND		Enable-
		6	EN+		Enable+

Step 2 Connect the signal cable connector to the COM port.

Figure 5-28 Securing the signal cable connector

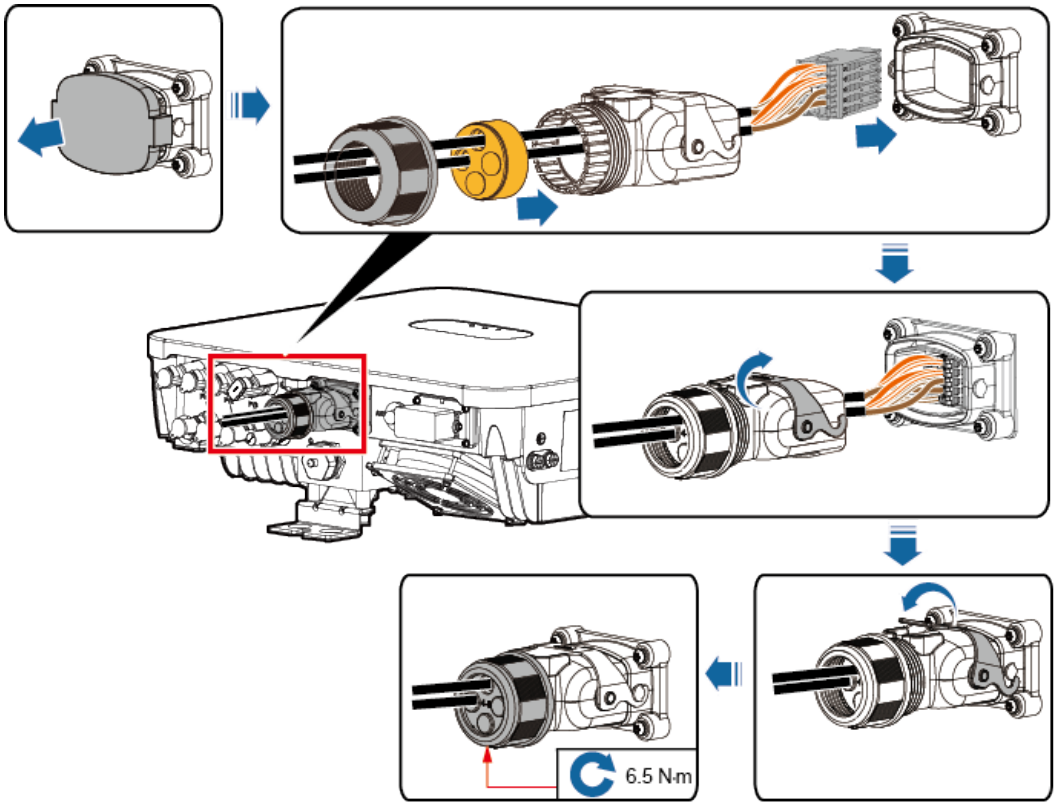

IH09H40003

----End

5.7.4 Connecting RS485 Communications Cables (Power Meter and Battery)

Cable Connections

The following figure shows the cable connections between the inverter and the DDSU666-H power meter.

Figure 5-29 Connecting cables to the DDSU666-H power meter

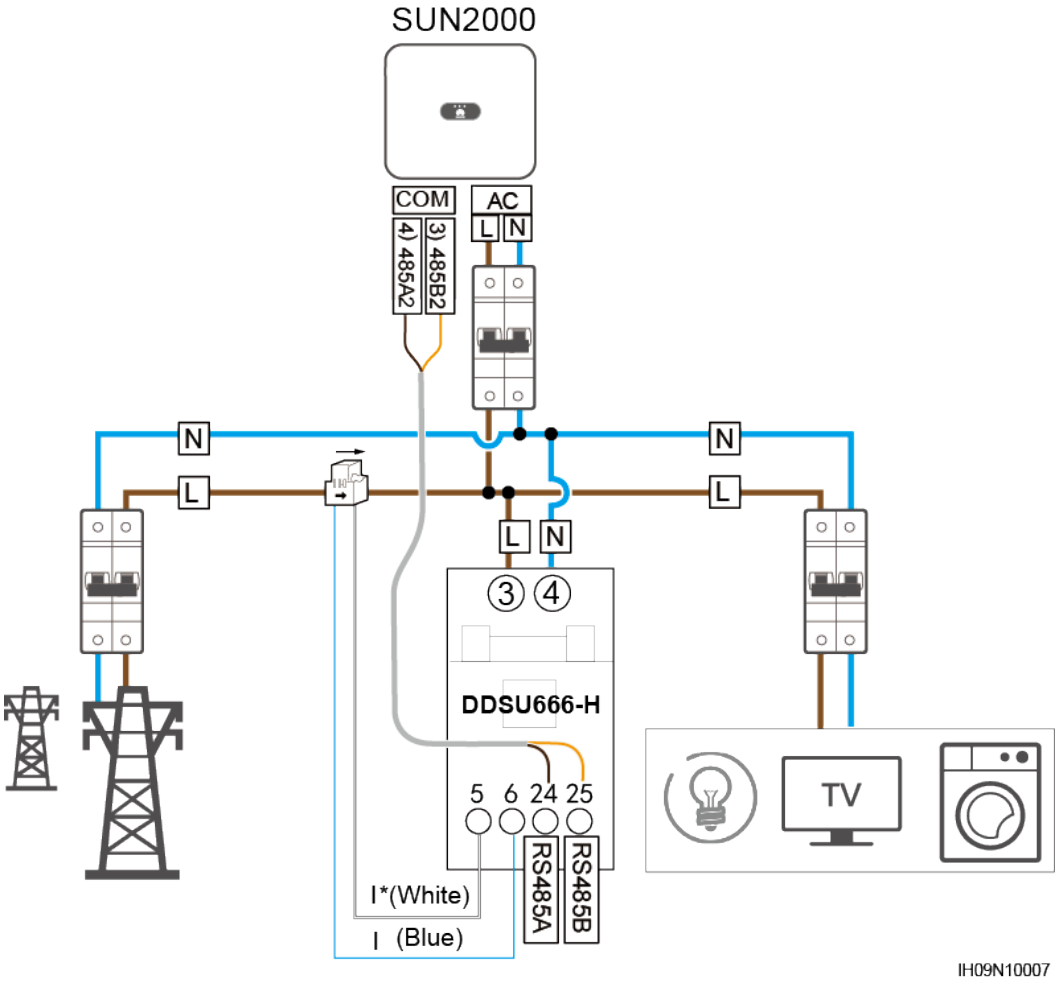

NOTE

- The power meter and the Smart Dongle must be connected to the same inverter.
- Retain the default baud rates for the power meters. If they are changed, the power meters may go offline, generate alarms, or affect the inverter output power.
- The preceding networking uses DDSU666-H as an example. Cable connections for other meter models may vary.

Procedure

Step 1 Connect the signal cable to the signal cable connector block.

- Connecting the inverter to the power meter

Figure 5-30 Installing the cable (connecting to the power meter)

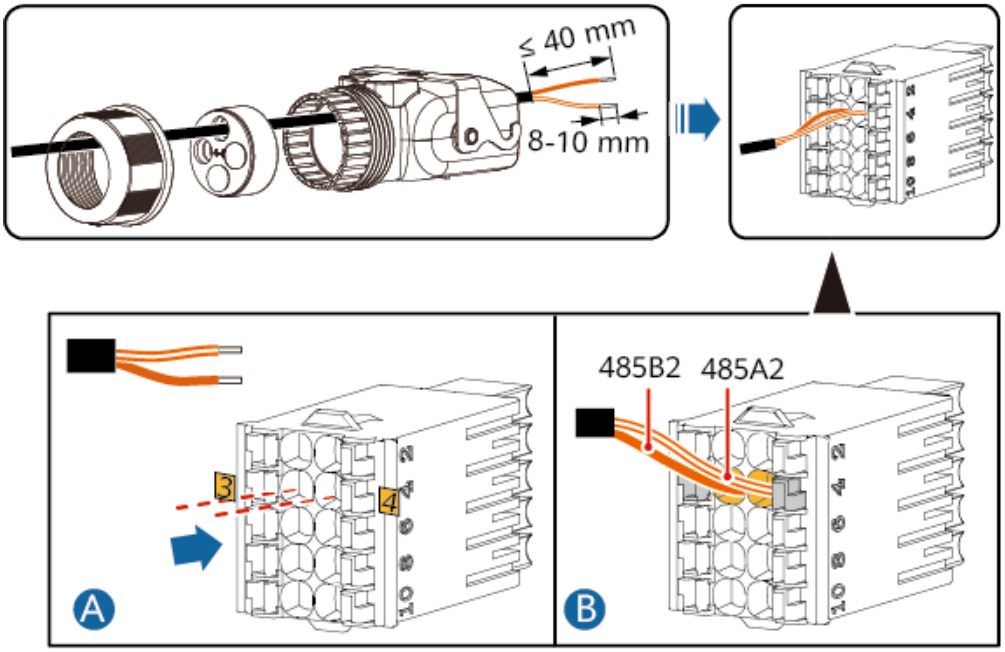

IH09I40006

- Connecting the power meter and battery to the inverter

Figure 5-31 Installing cables (connecting to the power meter and battery)

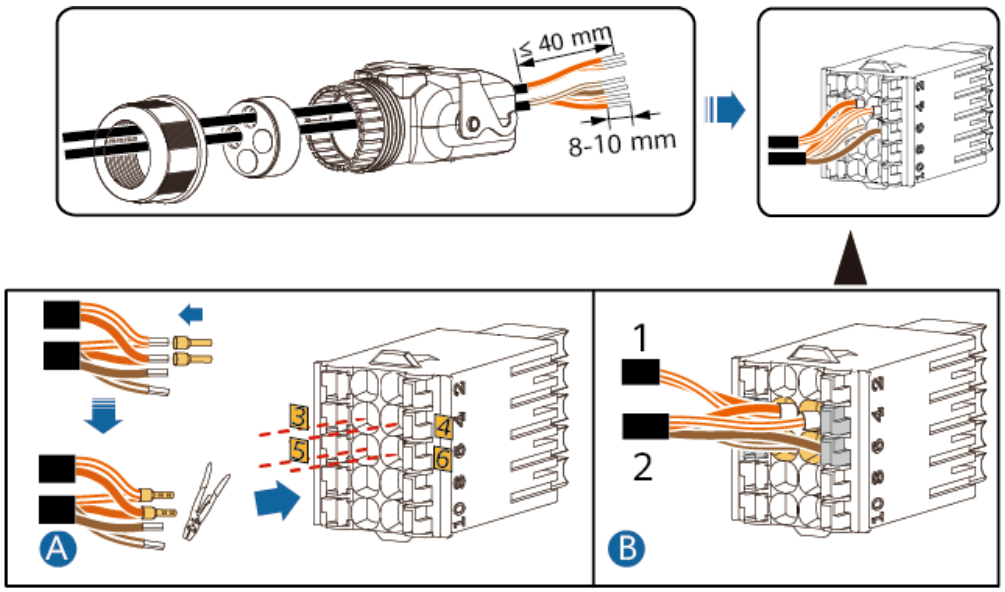

IH09I40007

Table 5-5 Cable connections

Cable		Pin	Definition	To	
1		3	485B2	Power meter	485B
		4	485A2		485A
2		3	485B2	Battery	485B
		4	485A2		485A
		5	GND		Enable-
		6	EN+		Enable+

Step 2 Connect the signal cable connector to the COM port.

Figure 5-32 Securing the signal cable connector

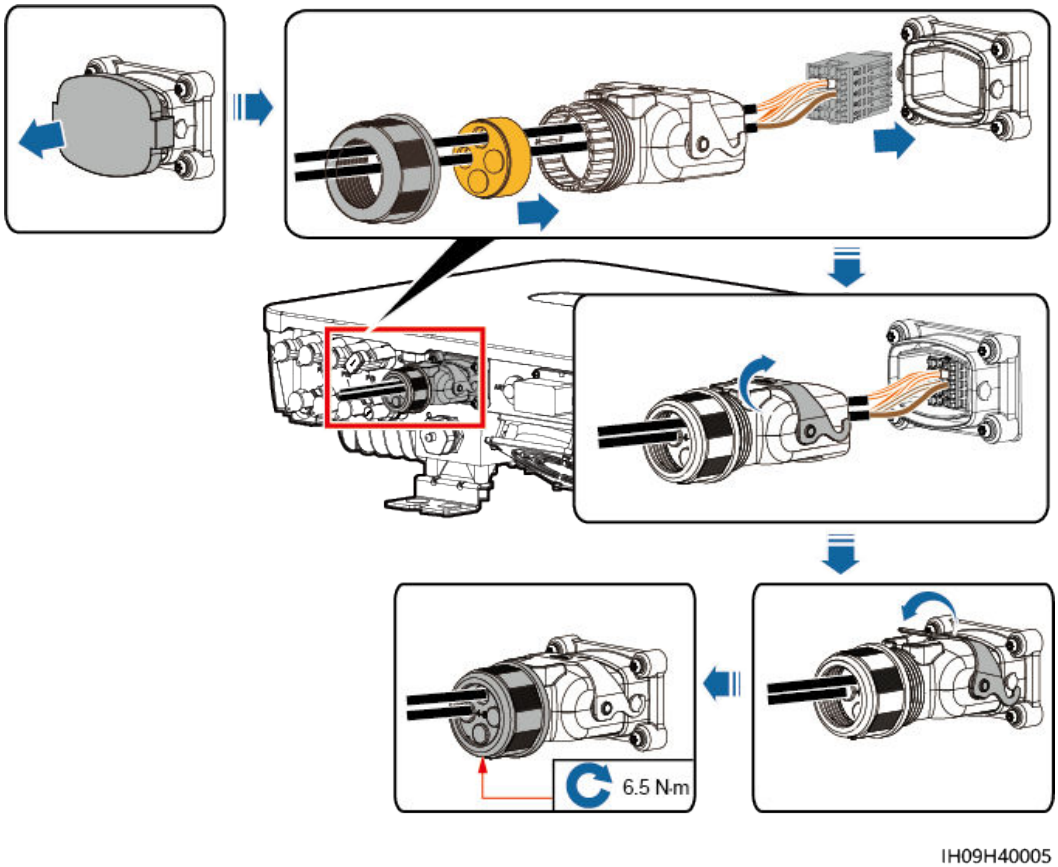

----End

5.7.5 Connecting Rapid Shutdown Signal Cables

Procedure

Step 1 Connect the signal cable to the signal cable connector block.

NOTICE

- The rapid shutdown function is supported only if optimizers are configured for all PV modules.
- Connect terminals 5 and 7 to a switch. The switch is turned on by default. When the switch is turned off, a rapid shutdown is triggered.

Figure 5-33 Installing the cable

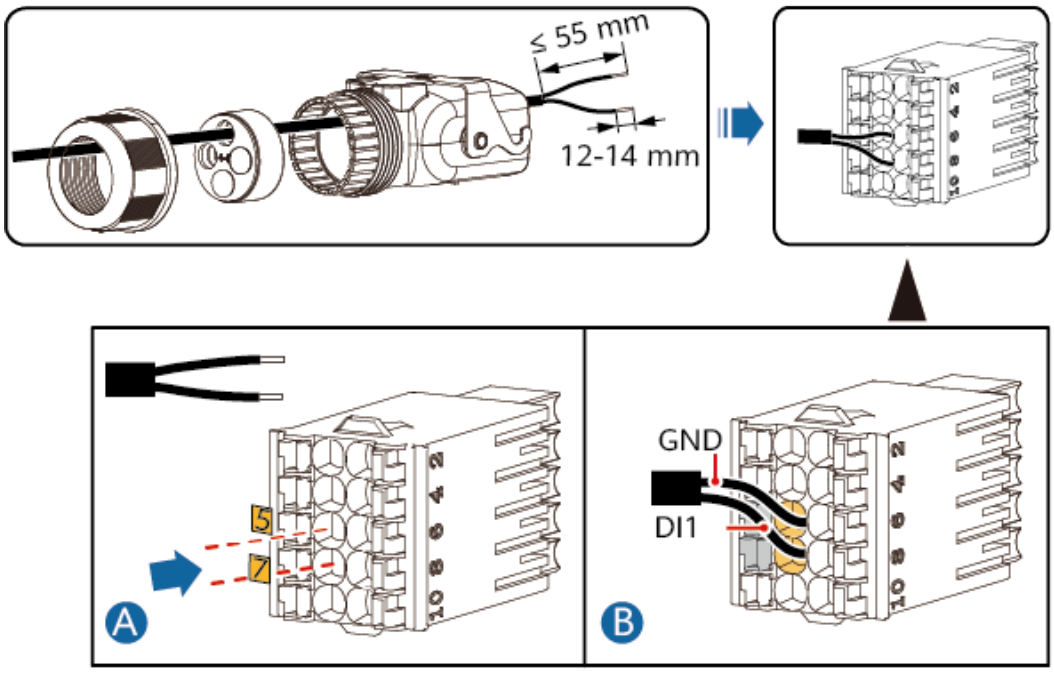

Step 2 Connect the signal cable connector to the COM port.

Figure 5-34 Securing the signal cable connector

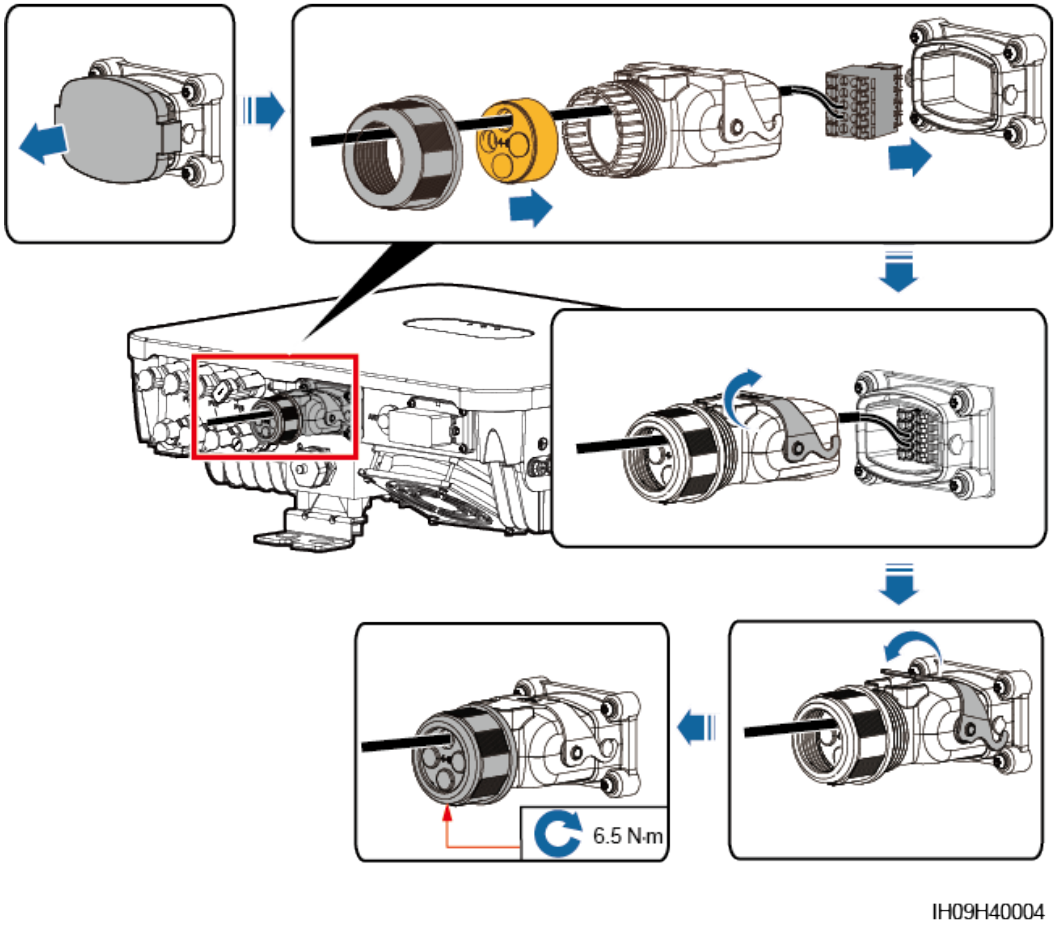

----End

5.8 (Optional) Installing the Smart Dongle and Anti-theft Components

NOTE

- If WLAN-FE communication is used, install the WLAN-FE Smart Dongle (SDongleA-05). For details, see **SDongleA-05 Smart Dongle Quick Guide (WLAN-FE)**.
- If 4G communication is used, install the 4G Smart Dongle (SDongleB-06). For details, see **SDongleB-06 Smart Dongle Quick Guide (4G)**.

NOTE

If the Smart Dongle is used, you need to install anti-theft components after installing the Smart Dongle.

WLAN-FE Smart Dongle (FE Communication)

You are advised to use a CAT 5E outdoor shielded network cable (outer diameter < 9 mm; internal resistance ≤ 1.5 ohms/10 m) and shielded RJ45 connectors.

Figure 5-35 Installing the WLAN-FE Smart Dongle (FE communication)

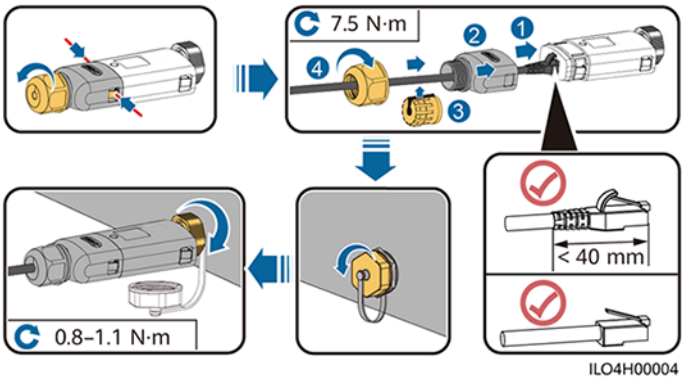

Figure 5-36 Installing anti-theft components for the Smart Dongle

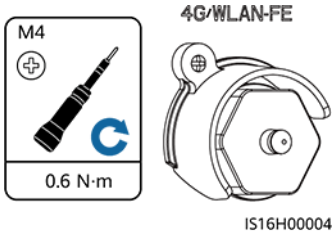

4G Smart Dongle (4G Communication)

NOTE

- If your Smart Dongle is not configured with a SIM card, you need to prepare one (dimensions: 25 mm x 15 mm; capacity: ≥ 64 KB).
- When installing the SIM card, determine its installation direction based on the silk screen and arrow on the card slot.
- Press the SIM card in place to lock it. In this case, the SIM card is correctly installed.
- When removing the SIM card, push it inward to eject it.
- When reinstalling the enclosure of the Smart Dongle, ensure that the snap-fits click into place.

Figure 5-37 Installing the 4G Smart Dongle (SDongleB-06)

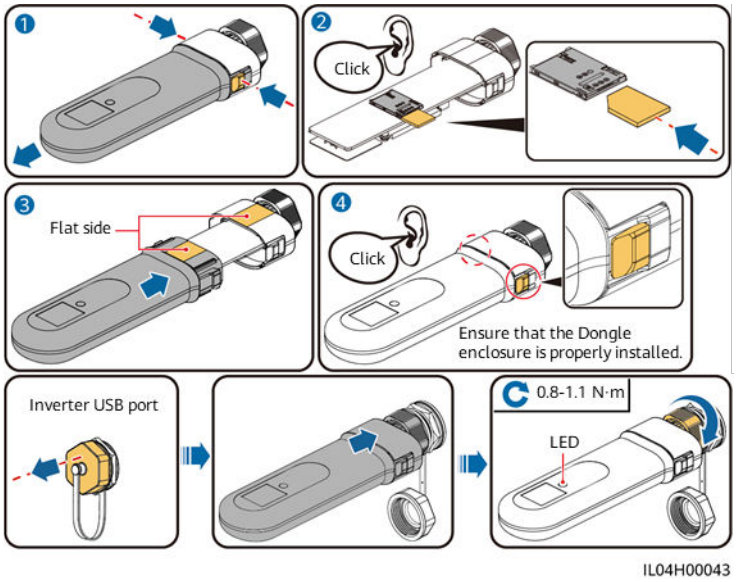

Figure 5-38 Installing anti-theft components for the Smart Dongle

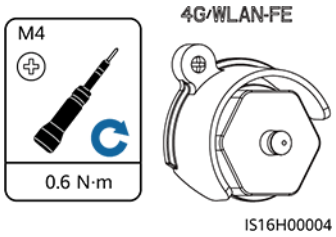

5.9 (Optional) Installing an Antenna

Procedure

Step 1 Remove the watertight cap from the ANT port.

Step 2 Install the washer to the ANT port on the device.

Step 3 Install the WLAN antenna.

NOTICE

Ensure that the WLAN antenna is installed securely.

Figure 5-39 Installing a WLAN antenna

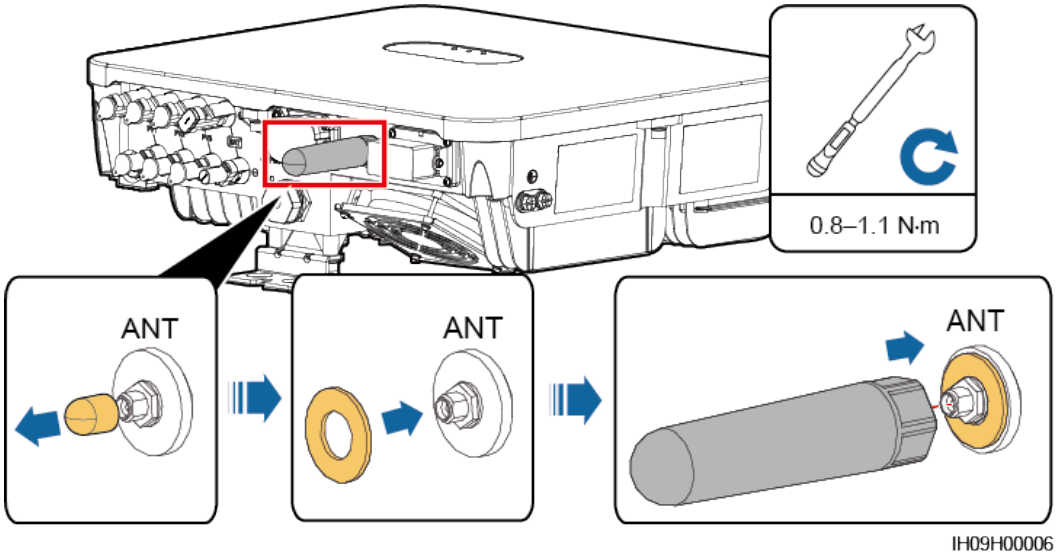

----End

6 Check Before Power-On

Table 6-1 Installation checklist

No.	Check Item	Acceptance Criteria
1	Inverter installation	The inverter is installed correctly, securely, and reliably.
2	Smart Dongle	The Smart Dongle is installed correctly and securely.
3	Cable layout	Cables are routed properly as required by the customer.
4	Cable tie	Cable ties are secured evenly and no burr exists.
5	Grounding	The ground cable is connected correctly, securely, and reliably.
6	Turn off the switches	The **DC SWITCH** and all the switches connected to the inverter are set to **OFF**.
7	Cable connections	The AC output power cable, DC input power cable, and signal cable are connected correctly, securely, and reliably.
8	Unused terminals and ports	Unused terminals and ports are locked by watertight caps.
9	Installation environment	The installation space is proper, and the installation environment is clean and tidy, without foreign matter.

 Copyright © Huawei Digital Power Technologies Co., Ltd.

7 Power-On and Commissioning

DANGER

- Wear personal protective equipment and use dedicated insulated tools to avoid electric shocks or short circuits.

7.1 Powering On the Inverter

Precautions

NOTICE

Before the equipment is put into operation for the first time, ensure that the parameters are set correctly by professional personnel. Incorrect parameter settings may result in noncompliance with local grid connection requirements and affect the normal operations of the equipment.

NOTICE

- If the DC power supply is connected but the AC power supply is disconnected, the inverter will report a **Grid Loss** alarm. The inverter can start properly only after the power grid recovers.
- If the AC power supply is connected but the battery is not connected, the inverter reports a **Battery Abnormal** alarm.

Procedure

Step 1 If a battery connects to the battery port, turn on the battery switch.

Step 2 At the AC switch between the inverter and the power grid, use a multimeter to measure the grid voltage and ensure that the voltage is within the allowed operating voltage range of the inverter. If the voltage is not in the allowed range, check the circuits.

 Copyright © Huawei Digital Power Technologies Co., Ltd.

Step 3 Turn on the AC switch between the inverter and the power grid.

Step 4 Turn on the DC switch (if any) between the PV strings and the inverter.

Step 5 Set the DC switch on the inverter to ON.

Step 6 Observe the LED indicators to check the status of the inverter.

Table 7-1 LED indicators

Category	Status		Description
Running indication 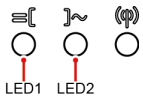	**LED1**	**LED2**	–
	Steady green	Steady green	The inverter is running in grid-tied state.
	Blinking green slowly (on for 1s and off for 1s)	Off	The DC is on and the AC is off.
	Blinking green slowly (on for 1s and off for 1s)	Blinking green slowly (on for 1s and off for 1s)	Both the DC and AC are on, and the inverter is off-grid.
	Off	Blinking green slowly (on for 1s and off for 1s)	The DC is off and the AC is on.
	Steady yellow	Steady yellow	The inverter is running in off-grid state.
	Blinking yellow slowly	Off	The DC is on and the inverter has no output in off-grid state.
	Blinking yellow slowly	Blinking yellow slowly	The inverter is in off-grid overload state.
	Off	Off	Both the DC and AC are off.
	Blinking red fast (on for 0.2s and off for 0.2s)	–	There is a DC environmental alarm, such as **String Voltage High**, **String Reverse Connection**, or **Low Insulation Resistance**.
	–	Blinking red fast (on for 0.2s and off for 0.2s)	There is an AC environmental alarm, such as **Grid Undervoltage**, **Grid Overvoltage**, **Grid Overfrequency**, or **Grid Underfrequency**.
	Steady red	Steady red	A fault exists.

Category	Status			Description
Communication indication 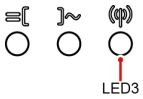	**LED3**			–
	Blinking green fast (on for 0.2s and then off for 0.2s)			Communication is in progress.
	Blinking green slowly (on for 1s and off for 1s)			A mobile phone is connected to the inverter.
	Off			There is no communication.
Device replacement indication	**LED1**	**LED2**	**LED3**	–
	Steady red	Steady red	Steady red	The inverter hardware is faulty and needs to be replaced.

NOTE

If off-grid overload occurs, the inverter indicators LED1 and LED2 will blink orange slowly. You need to reduce the power of the off-grid loads, and manually clear the alarm or wait for the inverter to automatically recover. The inverter attempts to restart every 5 minutes. After three failed attempts, the retry interval changes to 2 hours. If the inverter is standby in off-grid mode, check the inverter alarms and rectify the faults.

----End

7.2 Creating a Plant

7.2.1 Downloading the FusionSolar App

Method 1: Download and install the app from the app store.

- Huawei mobile phone users: Search for **FusionSolar** in Huawei AppGallery.
- iPhone users: Search for **FusionSolar** in the App Store.
- Other mobile phone users: Select method 2.

Method 2: Scan the QR code to download and install the app.

NOTE

Users who select method 2 can select the download method based on the mobile phone type.

- Huawei mobile phone users: Download from Huawei AppGallery.
- Non-Huawei phone users: Download on a browser.

When you select **Download via the Browser**, if a security warning message is displayed indicating that the app is from an external source, tap **ALLOW**.

7.2.2 Installer Registration

NOTE

- If you have an installer account, skip this step.
- You can register an account using a mobile phone only in China.
- The mobile number or email address used for registration is the user name for logging in to the FusionSolar app.

Create the first installer account and create a domain named after the company name.

Figure 7-1 Creating the first installer account

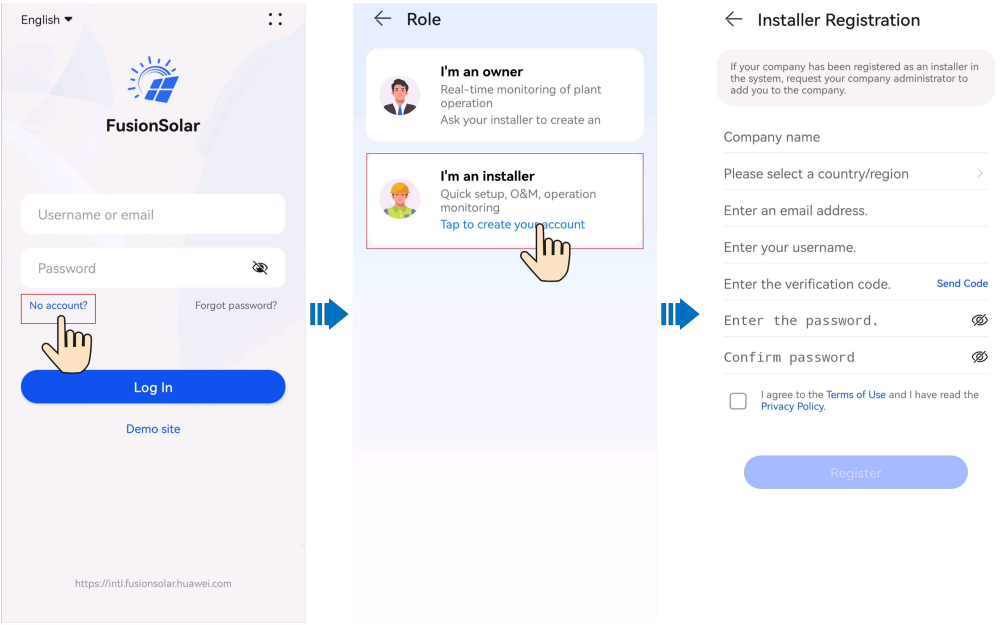

 Copyright © Huawei Digital Power Technologies Co., Ltd.

NOTICE

If the company requires multiple installer accounts, log in to the FusionSolar app and tap **Add user** to create another installer account.

Figure 7-2 Creating multiple installer accounts for the same company

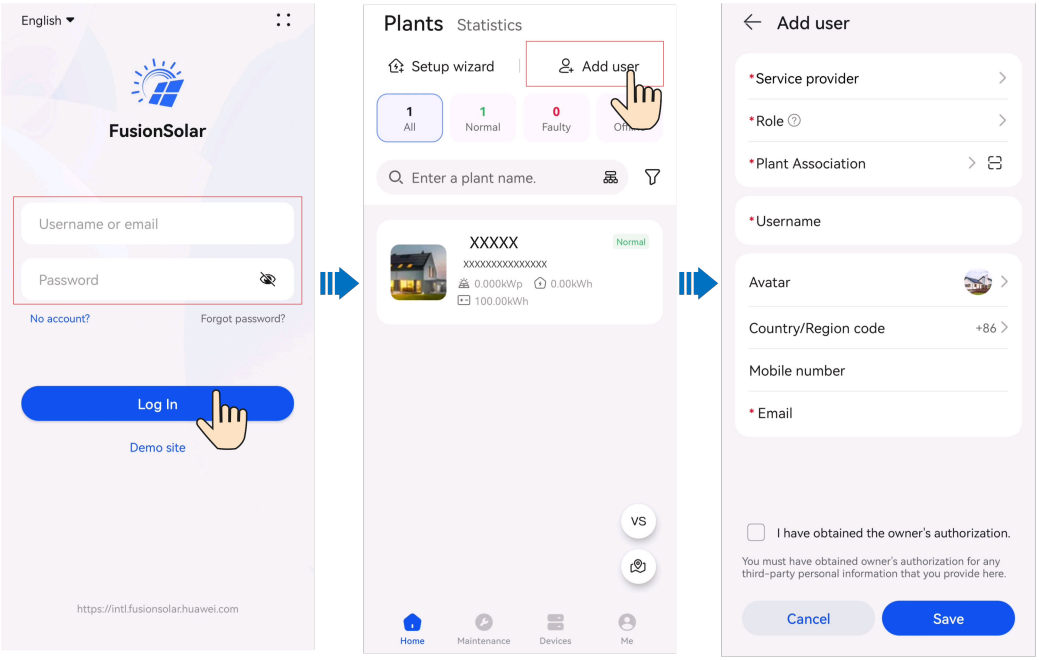

 Copyright © Huawei Digital Power Technologies Co., Ltd.

7.2.3 Creating a Plant and an Owner Account

Smart Dongle Networking

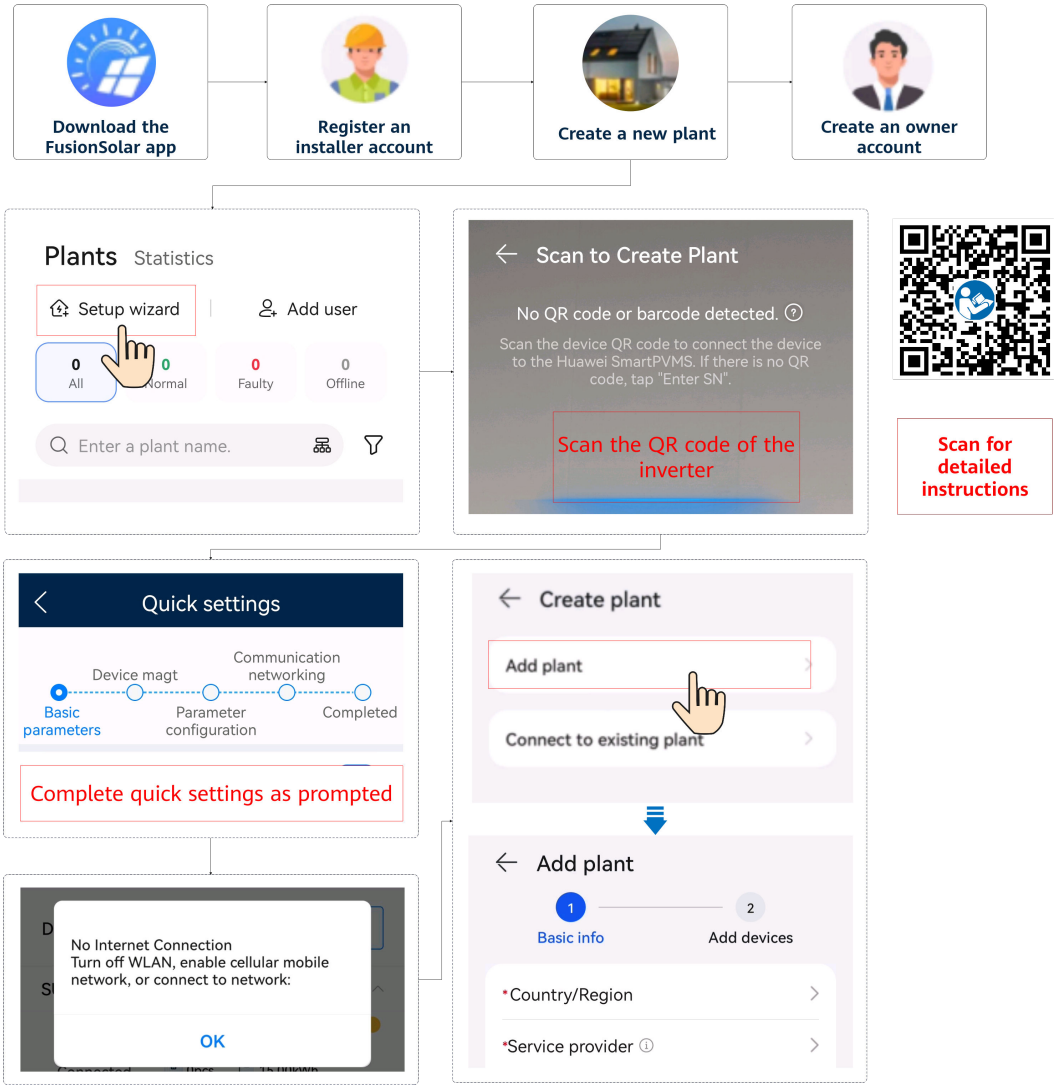

NOTE

For details about new plant deployment, see the **FusionSolar App Quick Guide** or scan the QR code.

EMMA Networking & SmartGuard networking

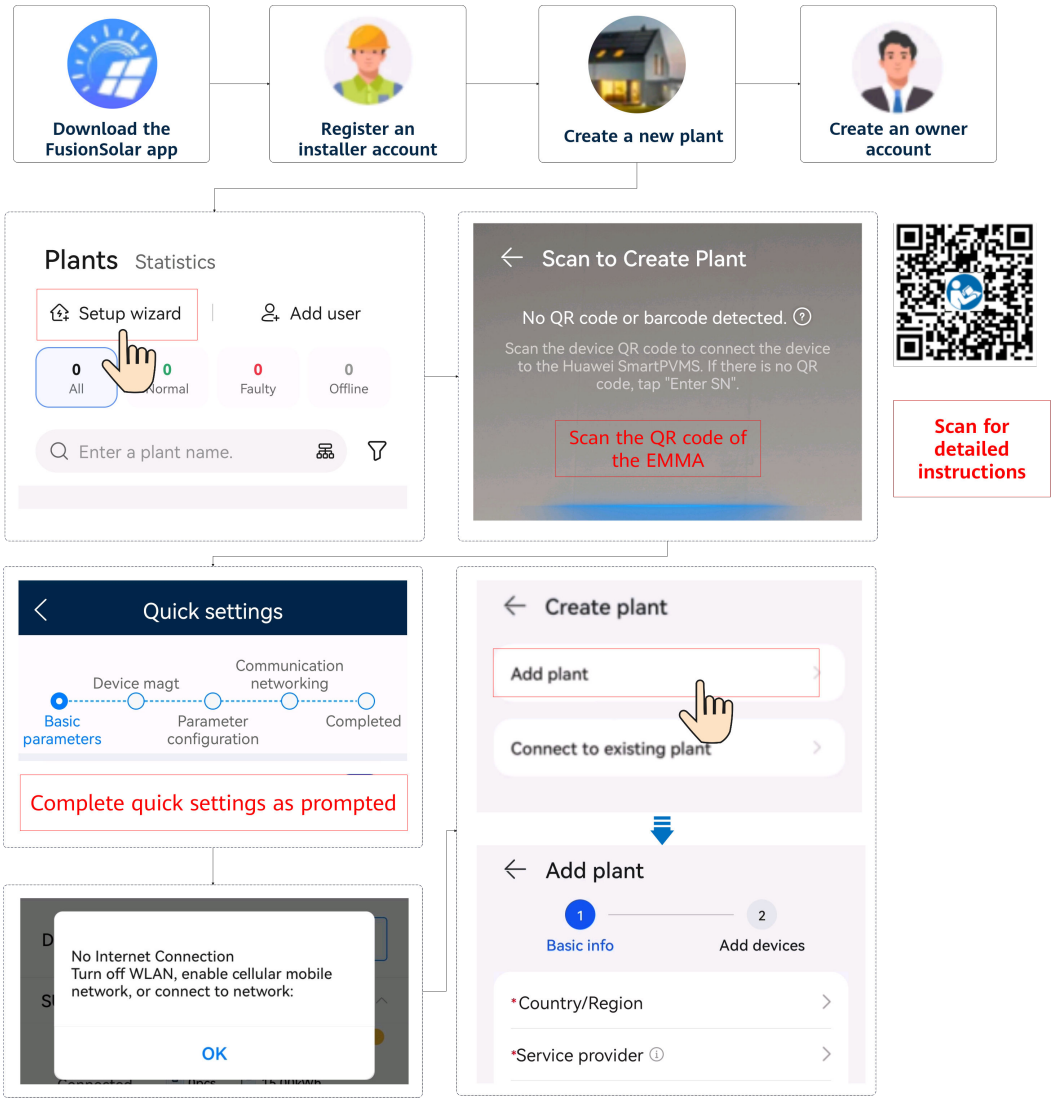

NOTE

For details, see **FusionSolar App Quick Guide (EMMA)**.

If the charger connects to the router through WLAN, you need to log in to the charger to set the WLAN information before deploying the EMMA.

1. Connect to the local commissioning screen of the charger.
2. Tap **O&M** > **Route Management** and select **WLAN**.

 Copyright © Huawei Digital Power Technologies Co., Ltd.

7.3 Setting Functions and Features Through Device Commissioning

NOTICE

- The grid-connection voltage and frequency of inverters in China are set before delivery according to NB/T 32004 or the latest Chinese standard. If the inverter fails to connect to the power grid because the power grid voltage is close to or higher than the voltage required by Chinese laws and regulations, you can select other voltage level after obtaining permission from the local power operator.
- If the power grid voltage exceeds the upper threshold, the service life of loads on the grid side may be affected, or energy yield loss may occur. In this case, the Company will not be liable for any consequences.

Choose **Commission Device** and set related device parameters.

- For details about the commissioning portal when the Smart Dongle networking is used, see **B Connecting the Inverter on the App**.
- For details about the commissioning portal when the EMMA networking is used, see **C Connecting the EMMA on the App**.

7.3.1 Setting Common Parameters

Set common parameters based on the devices connected to the plant.

 Copyright © Huawei Digital Power Technologies Co., Ltd.

Table 7-2 Setting common parameters

Parameter	Scenario Description	Operation
Grid-tied point control	Many regions impose a limit on the feed-in power of a power generation system. Therefore, a power meter is required to measure the power of the grid-tied point to control the output of the inverter in real time, ensuring that the feed-in power meets the power requirement allowed by the power grid.	• Smart Dongle networking: Choose **Commission Device**, tap **Power adjustment**, and set related parameters. For details about the parameter description and settings, see the section about **Parameter Settings** in the **Residential Smart PV Solution Commissioning Manual (Smart Dongle networking & direct inverter networking)**. • EMMA networking & SmartGuard networking: Choose **Commission Device**, tap **Power adjustment**, and set related parameters. For details about the parameter description and settings, see the section about **Parameter Settings** in the **Residential Smart PV Solution User Manual (EMMA Networking & SmartGuard Networking)**.
Battery parameter setting	If a battery is connected to the system, you need to add the battery and set battery parameters.	
Capacity control	This function applies to areas that have peak demand charges. The capacity control function allows you to lower the peak power drawn from grid in maximum self-consumption or TOU mode during peak hours, reducing electricity fees.	

To set more parameters, tap **Settings**. For details about the parameter settings, see the **FusionSolar App User Manual**. You can also scan the QR code to obtain the document.

7.3.2 (Optional) Setting the Physical Layout of the Smart PV Optimizers

The Smart PV Optimizer is a DC to DC converter which implements MPPT of each PV module to improve the energy yield of the PV system. It enables module-level shutdown and monitoring.

If optimizers are configured for PV modules, you can view the physical location of each optimizer after creating a physical layout. If a PV module is faulty, you can quickly locate the faulty PV module based on the physical layout to rectify the

fault. If a PV module without an optimizer is faulty, you need to check the PV modules one by one to locate the faulty one, which is time-consuming and inefficient.

For details about the physical location layout of the optimizers, see **FusionSolar Physical Layout User Guide**.

Figure 7-3 Viewing a physical layout on the FusionSolar app

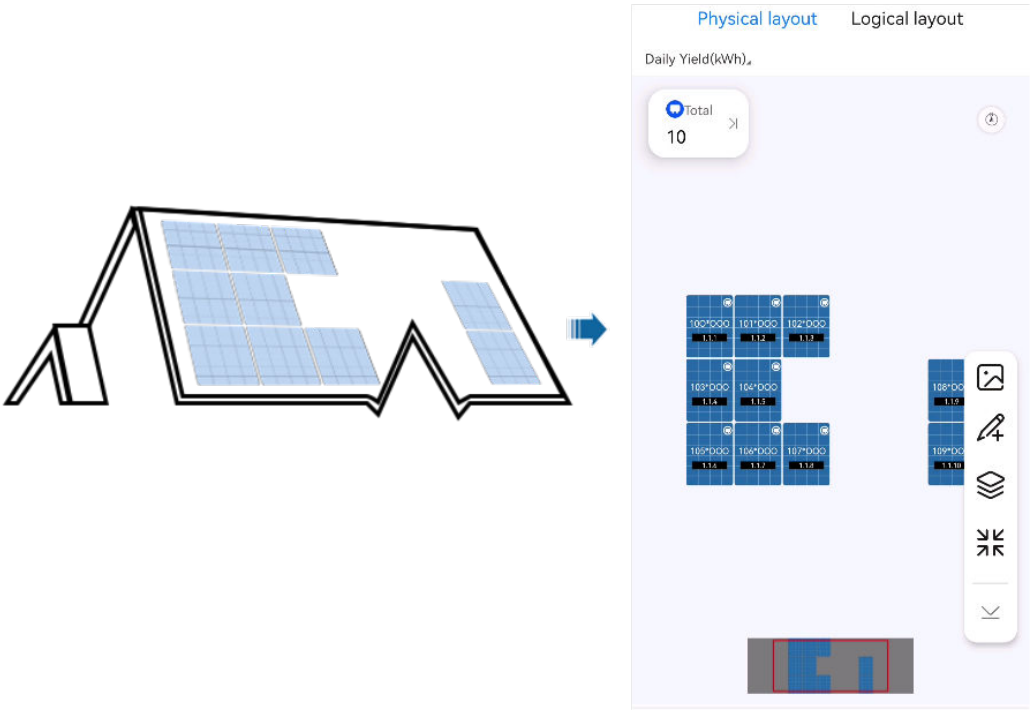

Figure 7-4 Viewing a physical layout on the FusionSolar SmartPVMS

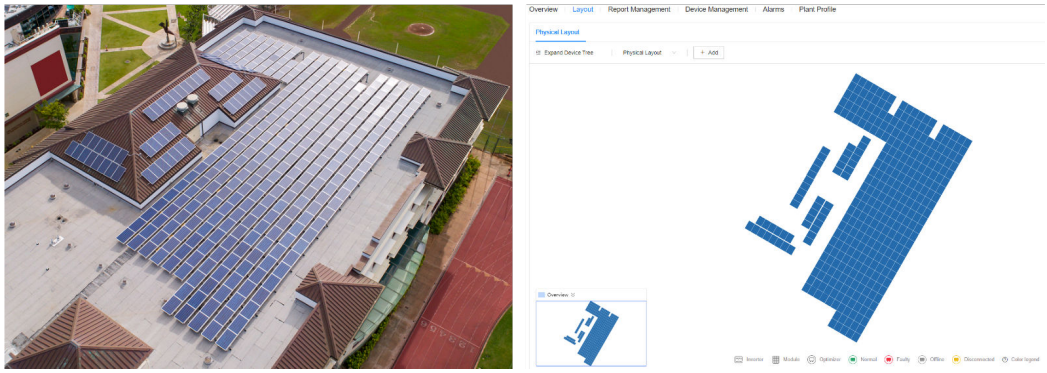

7.3.3 AFCI

Function

If PV modules or cables are not properly connected or damaged, electric arcs may occur, which may cause fire. Huawei inverters provide unique arc detection in compliance with UL 1699B-2018 to ensure the safety of users' lives and property.

This function is enabled by default. The inverter automatically detects arc faults. To disable this function, log in to the FusionSolar App, enter the **Device Commissioning** screen, choose **Settings** > **Feature parameters**, and disable **AFCI**.

NOTE

The AFCI function works only with Huawei optimizers or ordinary PV modules, but does not support third-party optimizers or intelligent PV modules.

Clearing Alarms

The AFCI function involves the **DC arc fault** alarm.

The inverter has the AFCI alarm automatic clearance mechanism. If an alarm is triggered for less than five times within 24 hours, the inverter automatically clears the alarm. If the alarm is triggered for five times or more within 24 hours, the inverter locks for protection. You need to manually clear the alarm on the inverter so that it can work properly.

You can manually clear the alarm as follows:

- **Method 1**: FusionSolar App

  Log in to the FusionSolar App and choose **Me** > **Device commissioning**. On the **Device commissioning** screen, connect and log in to the inverter that generates the AFCI alarm, tap **Alarm management**, and tap **Clear** on the right of the **DC arc fault** alarm to clear the alarm.

  Figure 7-5 Alarm management

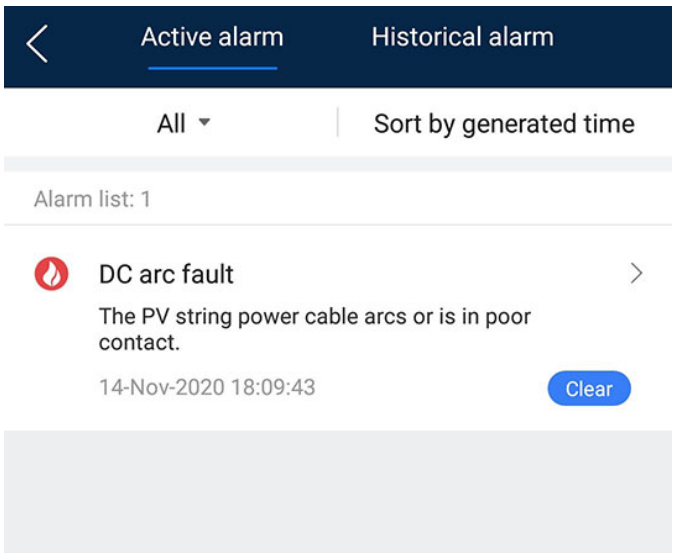

- **Method 2**: FusionSolar Smart PV Management System

  Log in to the FusionSolar Smart PV Management System using a non-owner account, choose **Maintenance** > **Alarm Management**, select the **DC arc fault** alarm, and click **Clear** to clear the alarm.

Figure 7-6 Clearing alarms

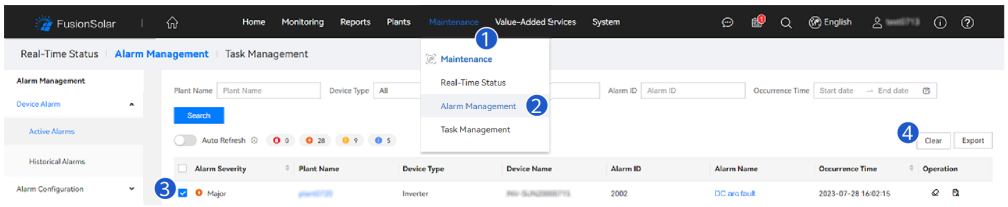

Switch to the owner account with PV plant management rights. On the home page, click the PV plant name to go to the PV plant page, and click **OK** as prompted to clear the alarm.

7.3.4 DRM (Australia AS 4777)

Function

According to Australia AS 4777.2-2015, inverters need to support the function of demand response modes (DRM), and DRM0 is a mandatory requirement.

This function is disabled by default.

Figure 7-7 Wiring diagram for the DRM function(Inverter connected to the NMS directly/Energy Management Assistant networking)

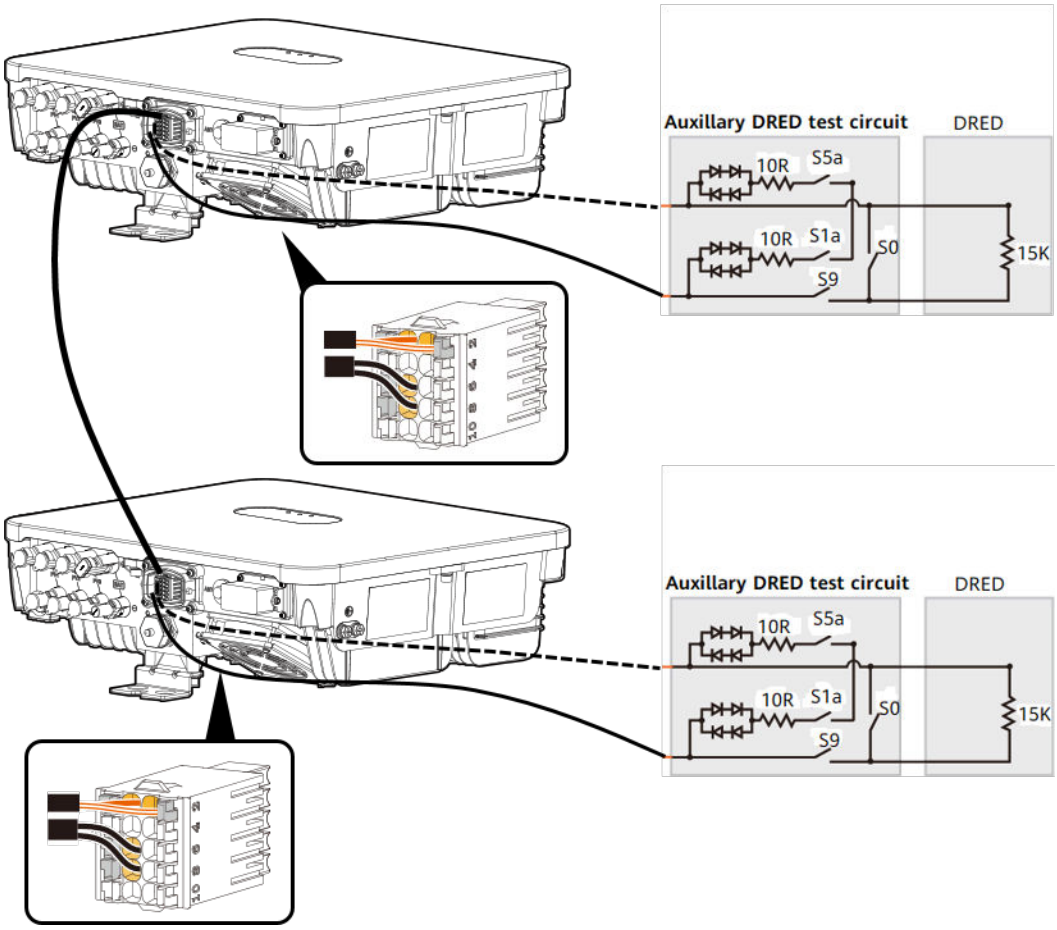

Table 7-3 DRM requirements

Mode	Port on the Inverter	Requirements
DRM0	DI1 and GND of the COM port	• When S0 and S9 are switched on, the inverter should be shut down. • When S0 is switched off and S9 is switched on, the inverter should be connected to the power grid.

Figure 7-8 Wiring diagram for the DRM function(EMMA networking)

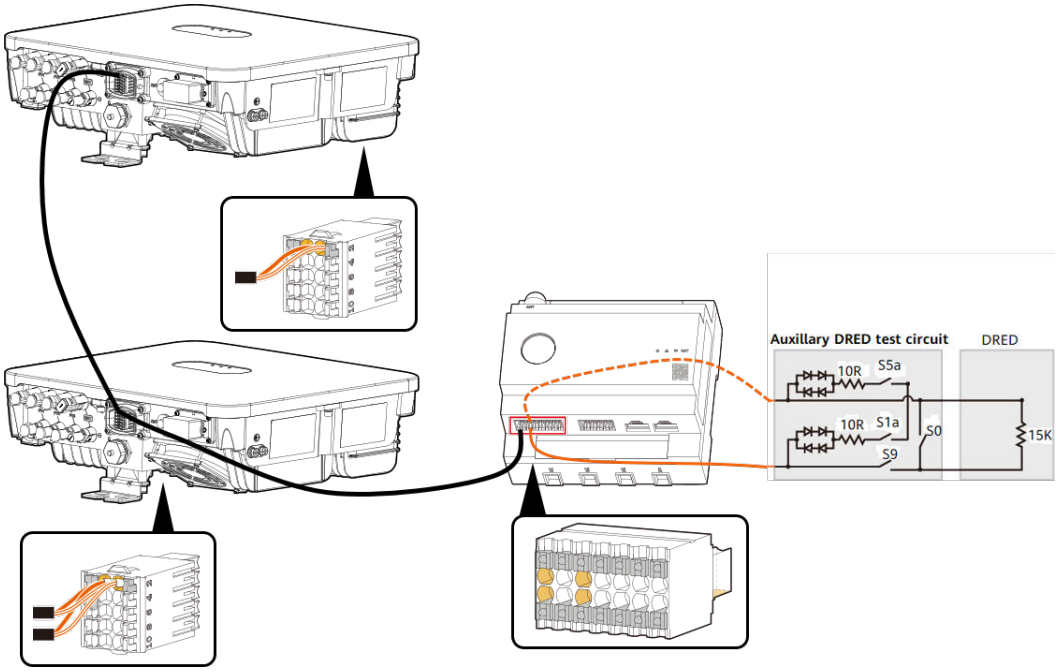

Table 7-4 DRM requirements

Mode	Port on the Energy Management Assistant	Requirements
DRM0	DI1+ and DI1- of the COM port	• When switches S0 and S9 are switched on, the solar inverter should be turned off. • When switch S0 is switched off, and switch S9 is switched on, the solar inverter should be grid-tied.

 Copyright © Huawei Digital Power Technologies Co., Ltd.

NOTE

The demand response enabling device (DRED) is a power grid dispatch device.

Procedure

Step 1 On the home page, choose **Settings** > **Feature parameters**.

Step 2 Set **DRM** to .

Figure 7-9 DRM

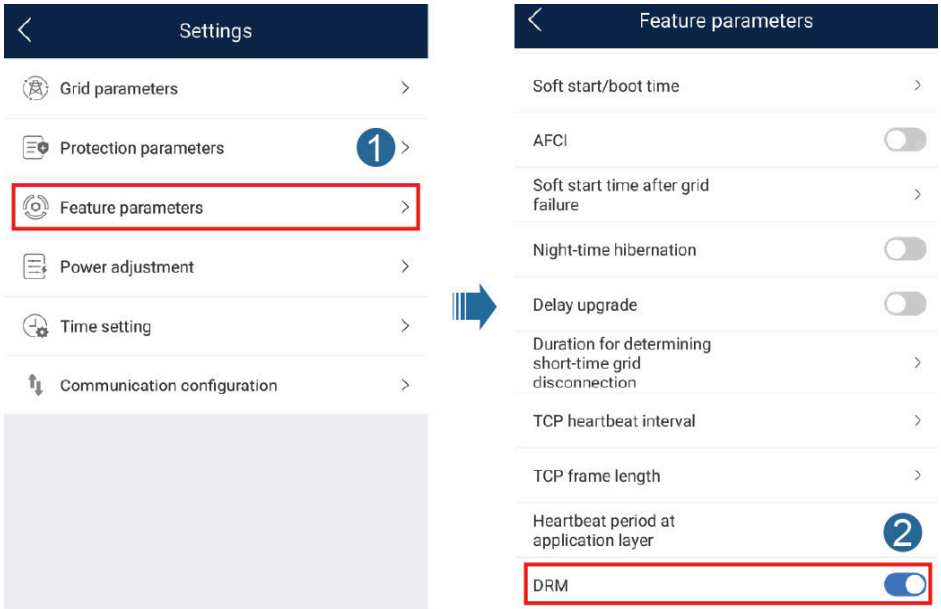

----End

7.4 Viewing the Plant Creation Status

The FusionSolar app provides an overview of plants. You can view the plant running status, energy yield and consumption, revenue, and energy flow diagram in real time.

Log in to the app, tap **Home**, and tap **Plants**. This screen displays the real-time running status and basic information of all plants managed by the user by default.

 Copyright © Huawei Digital Power Technologies Co., Ltd.

Figure 7-10 Viewing the plant creation status

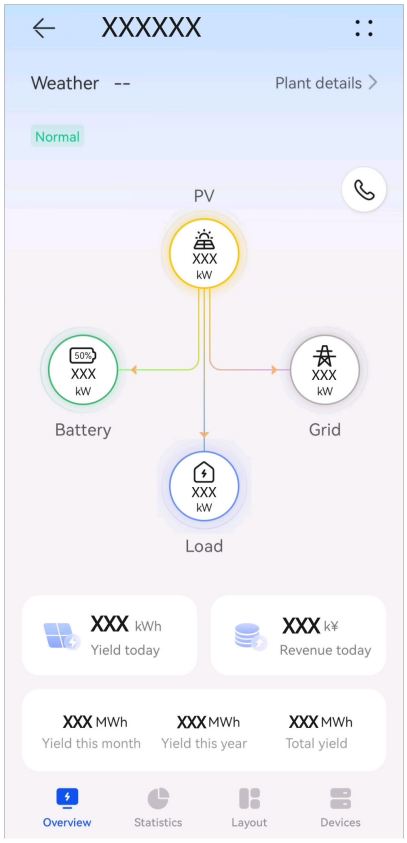

8 System Maintenance

DANGER

- Wear personal protective equipment and use dedicated insulated tools to avoid electric shocks or short circuits.

WARNING

- Before performing maintenance, power off the equipment, follow the instructions on the delayed discharge label, and wait for a period of time as specified to ensure that the equipment is not energized.

8.1 Routine Maintenance

To ensure that the inverter can operate properly for a long term, you are advised to perform routine maintenance on it as described in this section.

CAUTION

Power off the system before cleaning the system, connecting cables, and checking grounding reliability.

Table 8-1 Maintenance checklist

Check Item	Check Method	Maintenance Interval
System cleanliness	Check periodically whether the heat sinks are blocked or dirty.	Once every 6 to 12 months

 Copyright © Huawei Digital Power Technologies Co., Ltd.

Check Item	Check Method	Maintenance Interval
Cleanness of air intake and exhaust vents	Check periodically whether there is dust or foreign objects at the air intake and exhaust vents.	Power off the inverter and remove dust and foreign objects. If necessary, remove the baffle plates from the air intake and exhaust vents for cleaning. Once every 6 to 12 months (or once every 3 to 6 months based on the actual dust conditions in the environment)
Fan	Check whether the fan generates abnormal noise during operation.	Remove foreign objects from the fan. If the abnormal noise persists, replace the fan. For details, see **8.5 Replacing a Fan**. Once every 6 to 12 months
System running status	• Check whether the inverter is damaged or deformed. • Check whether the inverter generates abnormal sound during operation. • Check whether all inverter parameters are correctly set during operation.	Once every 6 months
Electrical connection	• Check whether cables are disconnected or loose. • Check whether cables are damaged, especially whether the cable sheath that contacts a metal surface is damaged.	6 months after the first commissioning and once every 6 to 12 months after that
Grounding reliability	Check whether the PE cable is securely connected.	6 months after the first commissioning and once every 6 to 12 months after that
Sealing	Check whether all terminals and ports are properly sealed.	Once a year

 Copyright © Huawei Digital Power Technologies Co., Ltd.

8.2 System Power-Off

Precautions

WARNING

- After the system is powered off, the inverter is still energized and hot, which may cause electric shocks or burns. Therefore, wait for at least 5 minutes and wear insulated gloves before working on the inverter.
- Before maintaining the optimizer and PV strings, power off the system by following the procedure. Otherwise, electric shocks may occur because the PV strings are energized.

Procedure

Step 1 Send a shutdown command on the app.

Step 2 Set the **DC SWITCH** to **OFF**.

Step 3 Turn off the AC switch between the inverter and the power grid.

Step 4 Turn off the DC switch between the inverter and PV strings.

Step 5 (Optional) Turn off the battery switch between the inverter and the battery.

----End

8.3 Troubleshooting

For details about alarms, see the **Inverter Alarm Reference**.

8.4 Replacing an Inverter

Step 1 Remove the inverter.

1. Power off the system. For details, see **8.2 System Power-Off**.
2. Disconnect all cables from the inverter, including signal cables, DC input power cables, battery cables, AC output power cables, and PE cables.
3. Remove the WLAN antenna or Smart Dongle from the inverter.
4. Remove the inverter from the mounting bracket.
5. Remove the mounting bracket.

Step 2 Pack the inverter.

- If the original packaging is available, put the inverter inside it and then seal it using adhesive tape.
- If the original packaging is unavailable, put the inverter inside a suitable hard cardboard box and seal it properly.

 Copyright © Huawei Digital Power Technologies Co., Ltd.

Step 3 Dispose of the inverter.

If the inverter reaches the end of its service life, dispose of it according to local regulations for the disposal of electrical equipment.

Step 4 Install a new inverter.

----End

8.5 Replacing a Fan

CAUTION

- Before replacing a fan, power off the inverter.
- When replacing a fan, use insulated tools and wear PPE.

Procedure

Step 1 Remove the inverter from the mounting bracket.

Step 2 Remove the fan cover, disconnect fan cables, and remove the faulty fan.

Figure 8-1 Removing the faulty fan

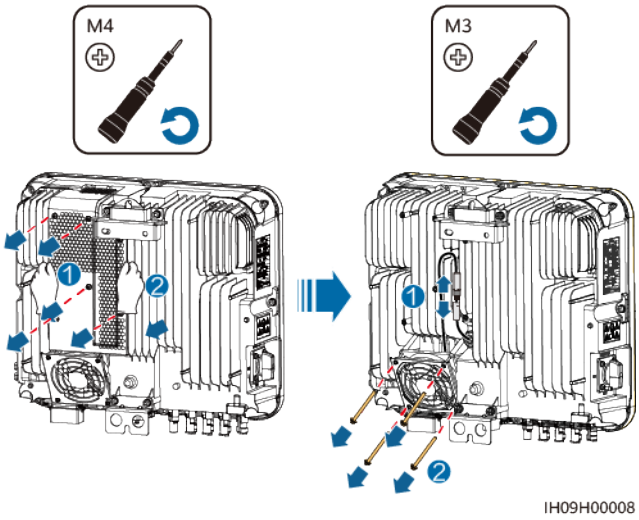

Step 3 Install a new fan, connect and bind the cables, and install the fan cover.

----End

8.6 Locating Insulation Resistance Faults

If the ground resistance of a PV string connected to the inverter is too low, the inverter generates a **Low insulation resistance** alarm.

The possible causes are as follows:

- A short circuit has occurred between the PV array and the ground.
- The ambient air of the PV array is damp and the insulation between the PV array and the ground is poor.

After the **Low insulation resistance** alarm is reported by the inverter, insulation resistance fault location is automatically triggered. If the fault location is successful, the location information is displayed on the **Alarm details** screen of the **Low insulation resistance** alarm on the FusionSolar app.

Log in to the FusionSolar app, choose **Alarm** > **Active alarm**, select **Low insulation resistance** to enter the **Alarm details** screen.

NOTE

- The positive and negative terminals of a PV string are connected to the PV+ and PV– terminals of the inverter, respectively. The 0% position corresponds to the PV– terminal, and the 100% position corresponds to the PV+ terminal. Other percentages indicate that the fault occurs on a PV module or cable in the PV string.
- Possible fault position = Total number of PV modules in a PV string x Percentage of possible short-circuit positions. For example, if a PV string consists of 14 PV modules and the percentage of the possible short-circuit position is 34%, the possible fault position is 4.76 (14 x 34%), indicating that the fault is located near PV module 4, including the adjacent PV modules and their cables. The inverter has a detection precision of ±1 PV module.
- MPPT1 that may be faulty corresponds to PV1, MPPT2 that may be faulty corresponds to PV2, and MPPT3 that may be faulty corresponds to PV3. Perform the following steps to locate and rectify the fault.
- When a non-short-circuit fault occurs, the possible short-circuit percentage is not displayed. If the insulation resistance is greater than 0.001 MΩ, the fault is not related to short circuit. Check all PV modules in the faulty PV string one by one to locate and rectify the fault.

Figure 8-2 Percentage of short-circuit positions

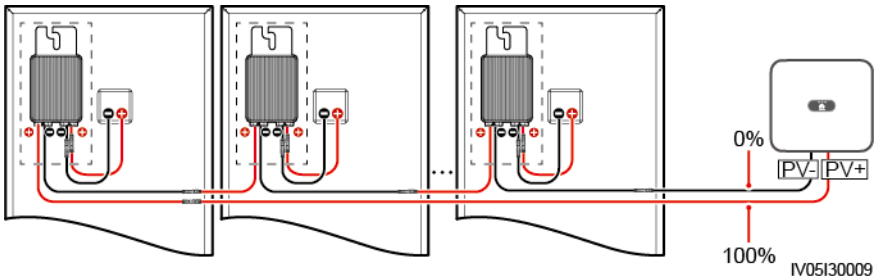

Procedure

NOTICE

If the irradiance or the PV string voltage is too high, the insulation resistance fault location may fail. In this case, the fault location status on the **Alarm details** screen is **Conditions not met**. Perform the following steps to connect PV strings to the inverter one by one to locate the fault. If the system is not configured with any optimizer, skip the corresponding optimizer operations.

Step 1 Ensure that the AC connections are normal. Log in to the FusionSolar app, choose **Maintenance** > **Inverter ON/OFF** on the home screen, and send a shutdown command. Set **DC SWITCH** to **OFF**.

Step 2 Connect one PV string to the inverter, and set **DC SWITCH** to **ON**. If the inverter status is **Shutdown: Command**, log in to the app, choose **Maintenance** > **Inverter ON/OFF** on the home screen, and send a startup command.

Step 3 Choose **Alarm** on the home screen, enter the **Active alarm** screen, and check whether a **Low insulation resistance** alarm is reported.

- If no **Low insulation resistance** alarm is reported 1 minute after the DC side is powered on, choose **Maintenance** > **Inverter ON/OFF** on the home screen, and send a shutdown command. Set **DC SWITCH** to **OFF**. Go to **Step 2** and check rest of the PV strings one by one.
- If a **Low insulation resistance** alarm is reported 1 minute after the DC side is powered on, check the percentage of possible short-circuit positions on the **Alarm details** screen and calculate the location of the possible faulty PV module based on the percentage. Then go to **Step 4**.

Step 4 Log in to the app, choose **Maintenance** > **Inverter ON/OFF** on the home screen, and send a shutdown command. Set **DC SWITCH** to **OFF**. Check whether the connectors or DC power cables between the optimizer and PV module, between adjacent PV modules, or between adjacent optimizers on the possible fault position are damaged.

- If yes, replace the damaged connectors or DC power cables, and then set **DC SWITCH** to **ON**. If the inverter status is **Shutdown: Command**, choose **Maintenance** > **Inverter ON/OFF**, and send a startup command. View alarm information.
  - If no **Low insulation resistance** alarm is reported 1 minute after the DC side is powered on, troubleshoot the insulation resistance fault of the PV string. Log in to the app, choose **Maintenance** > **Inverter ON/OFF** on the home screen, and send a shutdown command. Set **DC SWITCH** to **OFF**. Go to **Step 2** and check rest of the PV strings one by one. Then, go to **Step 8**.
  - If the DC side is powered on 1 minute later, the **Low insulation resistance** alarm is still reported. Log in to the app, choose **Maintenance** > **Inverter ON/OFF** on the home screen, and send a shutdown command. Set **DC SWITCH** to **OFF** and go to **Step 5**.
- If no, go to **Step 5**.

Step 5 Disconnect the possible faulty PV module and the paired optimizer from the PV string, and use a DC extension cable with an MC4 connector to connect the PV module or optimizer adjacent to the possible faulty PV module. Set **DC SWITCH** to **ON**. If the inverter status is **Shutdown: Command**, choose **Maintenance** > **Inverter ON/OFF** on the home screen, and send a startup command. View alarm information.

- If no **Low insulation resistance** alarm is reported 1 minute after the DC side is powered on, the fault occurred on the disconnected PV module and optimizer. Choose **Maintenance** > **Inverter ON/OFF**, send a shutdown command, and set **DC SWITCH** to **OFF**. Go to **Step 7**.
- If the **Low insulation resistance** alarm is reported 1 minute after the DC side is powered on, the fault did not occur on the disconnected PV module and optimizer. Go to **Step 6**.

 Copyright © Huawei Digital Power Technologies Co., Ltd.

Step 6 Log in to the app, choose **Maintenance** > **Inverter ON/OFF** on the home screen, and send a shutdown command. Set **DC SWITCH** to **OFF**, reconnect the disconnected PV module and optimizer, and repeat **Step 5** to check the PV modules and optimizers adjacent to the possible fault location.

Step 7 Determine the position of the ground insulation fault:

- Disconnect the possible faulty PV module from the optimizer.
- Connect the possible faulty optimizer to the PV string.
- Set **DC SWITCH** to **ON**. If the inverter status is **Shutdown: Command**, choose **Maintenance** > **Inverter ON/OFF**, and send a startup command. View alarm information.
  - If no **Low insulation resistance** alarm is reported 1 minute after the DC side is powered on, the fault is on the possible faulty PV module.
  - If the **Low insulation resistance** alarm is reported 1 minute after the DC side is powered on, the fault is on the possible faulty optimizer.
- Log in to the app, choose **Maintenance** > **Inverter ON/OFF** on the home screen, and send a shutdown command. Set **DC SWITCH** to **OFF**, replace the faulty component, and complete troubleshooting the insulation resistance fault. Go to **Step 2** and check rest of the PV strings one by one. Then, go to **Step 8**.

Step 8 Set **DC SWITCH** to **ON**. If the inverter status is **Shutdown: Command**, choose **Maintenance** > **Inverter ON/OFF**, and send a startup command.

----End

9 Technical Specifications

Efficiency

Technical Specifications	SUN2000-8K-LC0	SUN2000-10K-LC0	SUN2000-8K-LC0-ZH	SUN2000-10K-LC0-ZH
Maximum efficiency	98.1%	98.1%	98.1%	98.1%
European efficiency	97.5%	97.5%	97.5%	97.5%

Input

Technical Specifications	SUN2000-8K-LC0	SUN2000-10K-LC0	SUN2000-8K-LC0-ZH	SUN2000-10K-LC0-ZH
Recommended maximum input DC power	12,000 W	15,000 W	12,000 W	15,000 W
Maximum input voltage[1]	600 V			
Maximum input current per MPPT	16 A			
Maximum short-circuit current per MPPT	20 A			

 Copyright © Huawei Digital Power Technologies Co., Ltd.

Technical Specifications	SUN2000-8K-LC0	SUN2000-10K-LC0	SUN2000-8K-LC0-ZH	SUN2000-10K-LC0-ZH
Minimum startup voltage	50 V			
MPPT voltage range	40–560 V			
Rated input voltage	360 V			
Maximum number of inputs[2]	3			
Number of MPPT circuits	3			
Maximum battery input voltage	600 V DC			
Battery voltage range	350–600 V DC			
Maximum battery current	25 A			
Battery type	Li-ion			
Note [1]: The maximum input voltage is the maximum DC input voltage that the inverter can withstand. If the input voltage exceeds this value, the inverter may be damaged. Note [2]: Do not connect only one PV string to the inverter.				

On-Grid Output

Technical Specifications	SUN2000-8K-LC0	SUN2000-10K-LC0	SUN2000-8K-LC0-ZH	SUN2000-10K-LC0-ZH
Rated output power	8000 W	10,000 W	8000 W	10,000 W
Maximum apparent power	8800 VA	10,000 VA	8800 VA	10,000 VA

Technical Specifications	SUN2000-8K-LC0	SUN2000-10K-LC0	SUN2000-8K-LC0-ZH	SUN2000-10K-LC0-ZH
Maximum active power (cosϕ = 1)	8800 W	10,000 W	8800 W	10,000 W
Rated output voltage	220 V/230 V/240 V			
Maximum output voltage at long-term operation	Refer to the local power grid standards.			
Rated output current	36.4 A/220 V 34.8 A/230 V 33.3 A/240 V	45.5 A/220 V 43.5 A/230 V 41.7 A/240 V	36.4 A/220 V 34.8 A/230 V 33.3 A/240 V	45.5 A/220 V 43.5 A/230 V 41.7 A/240 V
Maximum output current	40.0 A	45.5 A	40.0 A	45.5 A
Output voltage frequency	50 Hz/60 Hz			
Maximum output fault current	113.12 A	128.55 A	113.12 A	128.55 A
Power factor	0.8 leading … 0.8 lagging			
Output DC component (DCI)	< 0.25% of the rated output			
Maximum total harmonic distortion (AC THDi)	≤ 3% (rated conditions)			

Off-Grid Output

Technical Specifications	SUN2000-8K-LC0	SUN2000-10K-LC0	SUN2000-8K-LC0-ZH	SUN2000-10K-LC0-ZH
Rated apparent power	8000VA	10000VA	8000VA	10000VA
Maximum apparent power	110%, 60s			

Protection

Technical Specifications	SUN2000-8K-LC0	SUN2000-10K-LC0	SUN2000-8K-LC0-ZH	SUN2000-10K-LC0-ZH
Overvoltage category	DC II/AC III			
Input DC switch	Supported			
Anti-islanding protection	Supported			
Output overcurrent protection	Supported			
Input reverse connection protection	Supported			
PV string fault detection	Supported			
DC surge protection	Supported			
AC surge protection	Supported			
Insulation resistance detection	Supported			
AFCI	Supported			

 Copyright © Huawei Digital Power Technologies Co., Ltd.

Technical Specifications	SUN2000-8K-LC0	SUN2000-10K-LC0	SUN2000-8K-LC0-ZH	SUN2000-10K-LC0-ZH
Residual current monitoring unit (RCMU)	Supported			

Display and Communication

Technical Specifications	SUN2000-8K-LC0	SUN2000-10K-LC0	SUN2000-8K-LC0-ZH	SUN2000-10K-LC0-ZH
Display	LED indicators			
WLAN-FE Dongle	Optional			
4G Smart Dongle	Optional			
RS485 communication	Supported			
Built-in WLAN	Supported			

General Specifications

Technical Specifications	SUN2000-8K-LC0	SUN2000-10K-LC0	SUN2000-8K-LC0-ZH	SUN2000-10K-LC0-ZH
Dimensions (W x H x D, with hanging kits)	425 mm x 376.5 mm x 150 mm			
Net weight	≤ 15 kg			
Noise	< 29 dB (typical working condition)	< 40 dB (typical working condition)	< 29 dB (typical working condition)	< 40 dB (typical working condition)
Operating temperature	–25°C to +60°C			
Relative humidity	0–100% RH			

Technical Specifications	SUN2000-8K-LC0	SUN2000-10K-LC0	SUN2000-8K-LC0-ZH	SUN2000-10K-LC0-ZH
Cooling mode	Free cooling	Smart air cooling	Free cooling	Smart air cooling
Maximum operating altitude	4000 m (derated when the altitude is greater than 2000 m)			
Storage temperature	–40°C to +70°C			
IP rating	IP66			
Topology	Transformerless			

Wireless Communication Parameters

Specifications	Inverter Built-in WiFi	WLAN-FE Smart Dongle	4G Smart Dongle
Frequency	2400–2483.5 MHz	SDongleA-05: 2400–2483.5 MHz	SDongleB-06-EU (WiFi): 2400–2483.5 MHz SDongleB-06-EU (4G): ● Supports LTE-FDD: B1/B3/B5/B8. ● Supports LTE-TDD: B7/B20/B28/B38/B40/B41. ● Supports GSM/GPRS/EDGE: 900 MHz/1800 MHz.
Protocol standard	WLAN 802.11b/g/n	SDongleA-05: WLAN 802.11b/g/n	SDongleB-06-EU (WiFi): WLAN 802.11b/g/n SDongleB-06-EU (4G): ● Supports LTE FDD (with receive diversity): B1/B3/B5/B8. ● Supports LTE-TDD (with receive diversity): B7/B20/B28/B38/B40/B41. ● Supports GSM: 900 MHz/1800 MHz. ● Supports digital audio.

 Copyright © Huawei Digital Power Technologies Co., Ltd.

Specifications	Inverter Built-in WiFi	WLAN-FE Smart Dongle	4G Smart Dongle
Bandwidth	20 MHz/40 MHz (optional)	20 MHz/40 MHz (optional)	LTE features: ● Supports a maximum of 3GPP R8 non-CA Cat 4 FDD and TDD. ● Supports 1.4 MHz/3 MHz/5 MHz/10 MHz/15 MHz/20 MHz RF bandwidth. ● Supports MIMO in the downlink. ● LTE-FDD: maximum downlink rate of 150 Mbit/s and maximum uplink rate of 50 Mbit/s ● LTE-TDD: maximum downlink rate of 130 Mbit/s and maximum uplink rate of 30 Mbit/s UMTS features: ● Supports 3GPP R7 HSDPA+, HSDPA, HSUPA, and WCDMA. ● Supports QPSK and 16QAM modulation. ● HSDPA+: maximum downlink rate of 21 Mbit/s ● HSUPA: maximum uplink rate of 5.76 Mbit/s ● WCDMA: maximum downlink rate of 384 kbit/s and maximum uplink rate of 384 kbit/s GSM features: GPRS: ● Supports GPRS multislot class 12. ● Coding schemes: CS-1, CS-2, CS-3, and CS-4 ● Maximum downlink rate: 85.6 kbit/s; maximum uplink rate: 85.6 kbit/s EDGE: ● Supports EDGE multislot class 12. ● Supports GMSK and 8-PSK modulation and coding schemes. ● Downlink coding format: MCS 1–9 ● Uplink coding format: MCS 1–9 ● Maximum downlink rate: 236.8 kbit/s; maximum uplink rate: 236.8 kbit/s SDongleB-06-EU (WiFi): 20 MHz/40 MHz (optional)

Specifications	Inverter Built-in WiFi	WLAN-FE Smart Dongle	4G Smart Dongle
Maximum transmit power	≤ 20 dBm EIRP	≤ 20 dBm EIRP	● Class 4 (33 dBm±2 dB), EGSM900 frequency band ● Class 1 (30 dBm±2 dB), DCS1800 frequency band ● Class E2 (27 dBm±3 dB), EGSM900 8-PSK ● Class E2 (26 dBm±3 dB), DCS1800 8-PSK ● Class 3 (24 dBm+1/–3 dB), WCDMA frequency band ● Class 3 (23 dBm±2 dB), LTE-FDD frequency band ● Class 3 (23 dBm±2 dB), LTE-TDD frequency band SDongleB-06-EU (WiFi): ≤ 20 dBm EIRP

 Copyright © Huawei Digital Power Technologies Co., Ltd.

A Grid Codes

NOTE

The grid codes are subject to change. The listed codes are for reference only.

Table A-1 SUN2000-(8K, 10K)-LC0-ZH grid code

No.	Grid Code	Description	SUN2000-8K-LC0-ZH	SUN2000-10K-LC0-ZH
1	NB/T 32004	China Golden Sun low-voltage power grid	Supported	Supported
2	Island-Grid	Grid code for off-grid operation	Supported	Supported

Table A-2 SUN2000-(8K, 10K)-LC0 grid codes

No.	Grid Code	Description	SUN2000-8K-LC0	SUN2000-10K-LC0
1	RD1699/661	Spain low-voltage power grid	Supported	Supported
2	PO12.3	Spain low-voltage power grid	Supported	Supported
3	NTS	Spain power grid	Supported	Supported
4	EN50549-LV	Netherlands, Luxembourg, Türkiye, Slovakia, Ireland, Norway, Portugal, and Hungary	Supported	Supported
5	EN50549-SE	Sweden low-voltage power grid	Supported	Supported

 Copyright © Huawei Digital Power Technologies Co., Ltd.

No.	Grid Code	Description	SUN2000-8K-LC0	SUN2000-10K-LC0
6	ANRE	Romania power grid	Supported	Supported
7	ABNT NBR 16149	Brazil power grid	Supported	Supported
8	AUSTRALIA-AS4777_A-LV230	Australia power grid	Supported	Supported
9	AUSTRALIA-AS4777_B-LV230	Australia power grid	Supported	Supported
10	AUSTRALIA-AS4777_C-LV230	Australia power grid	Supported	Supported
11	AUSTRALIA-AS4777_NZ-LV230	Australia power grid	Supported	Supported
12	G99-TYPEA-LV	UK G99_TypeA_LV power grid	Supported	Supported
13	TAI-PEA	Thailand grid-connection standard	Supported	Supported
14	TAI-MEA	Thailand grid-connection standard	Supported	Supported
15	TAIPOWER	Taiwan Power low-voltage power grid	Supported	Supported
16	HONGKONG	Hong Kong low-voltage power grid	Supported	Supported
17	SINGAPORE	Singapore low-voltage power grid	Supported	Supported
18	Philippines	Philippines low-voltage power grid	Supported	Supported
19	NRS-097-2-1	South Africa power grid standard	Supported	Supported
20	NC2022	New Caledonia power grid	Supported	Supported
21	IEC 61727	IEC 61727 low-voltage grid-connection (50 Hz)	Supported	Supported
22	IEC 61727 - 60 Hz	IEC 61727 low-voltage grid-connection (60 Hz)	Supported	Supported
23	Custom (50 Hz)	Reserved	Supported	Supported
24	Custom (60 Hz)	Reserved	Supported	Supported
25	Island-Grid	Off-grid grid code	Supported	Supported

 Copyright © Huawei Digital Power Technologies Co., Ltd.

B Connecting the Inverter on the App

Step 1 Access the **Commission Device** screen.

Figure B-1 Method 1: before login (not connected to the Internet)

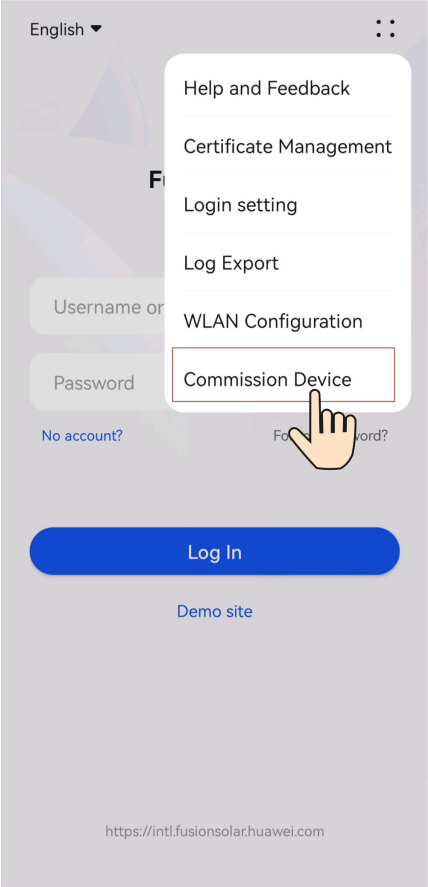

Figure B-2 Method 2: after login (connected to the Internet)

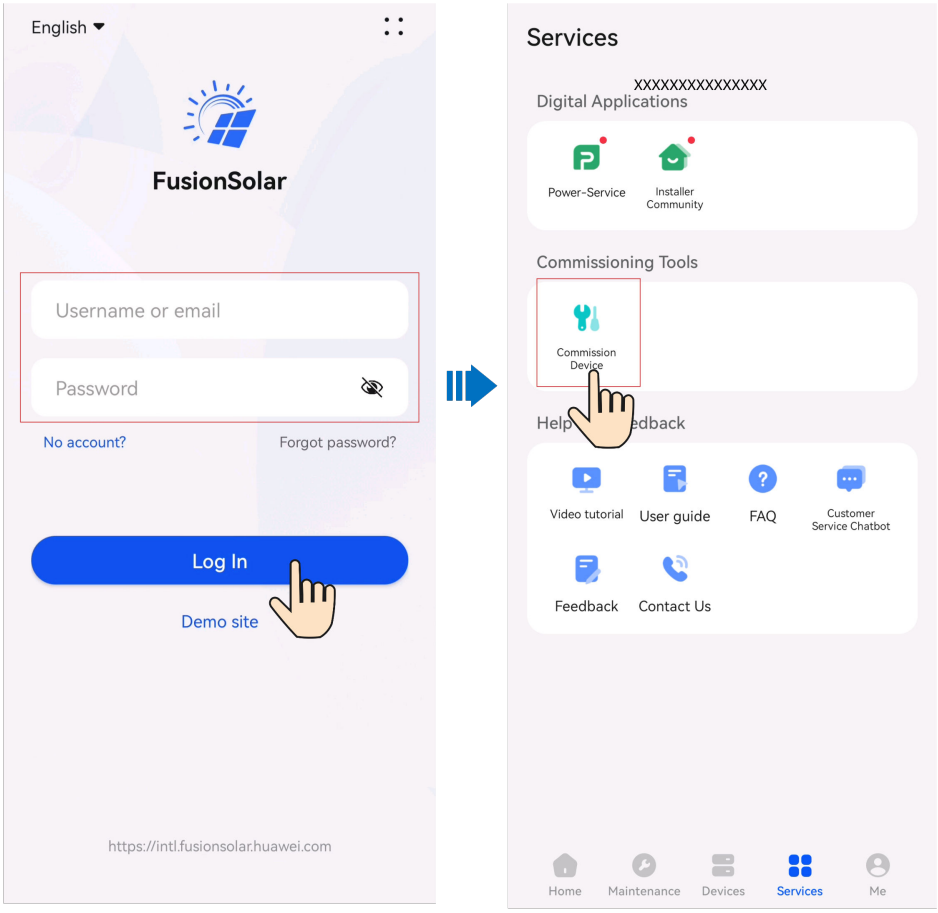

Step 2 Connect to the inverter WLAN, log in as **Installer**, and access the device commissioning screen.

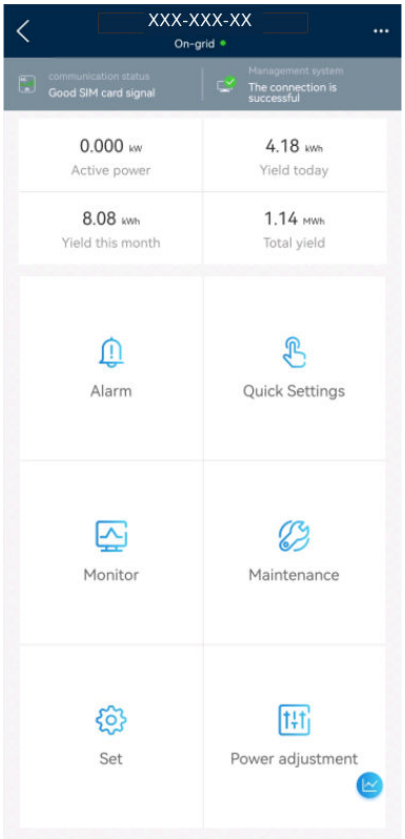

NOTICE

- When directly connecting your phone to a device, ensure that your phone is within the WLAN coverage of the device.
- When connecting the device to the router over WLAN, ensure that the device is within the WLAN coverage of the router and the signal is stable and good.
- The router supports WLAN (IEEE 802.11 b/g/n, 2.4 GHz) and the WLAN signal reaches the inverter.
- The WPA, WPA2, or WPA/WPA2 encryption mode is recommended for routers. The Enterprise mode is not supported (such as airport WLAN and other public hotspots that require authentication). WEP and WPA TKIP are not recommended because they have serious security vulnerabilities. If the access fails in WEP mode, log in to the router and change the encryption mode of the router to WPA2 or WPA/WPA2.

 Copyright © Huawei Digital Power Technologies Co., Ltd.

NOTE

- The last six digits of the product WLAN name are the same as the last six digits of the product SN.
- For the first connection, log in with the initial password. You can obtain the initial password from the label on the device.
- To ensure account security, protect the password by changing it periodically, and keep it secure. Your password might be stolen or cracked if it is left unchanged for extended periods. If a password is lost, devices cannot be accessed. In these cases, the Company shall not be liable for any loss.
- If the login screen is not displayed after you scan the QR code, check whether your phone is correctly connected to the device WLAN. If not, manually select and connect to the WLAN.
- If the **This WLAN network has no Internet access. Connect anyway?** message is displayed when you connect to the built-in WLAN, tap **CONNECT**. Otherwise, you cannot log in to the system. The actual UI and messages may vary with mobile phones.

----End

C Connecting the EMMA on the App

Step 1 Access the **Commission Device** screen.

Figure C-1 Method 1: before login (not connected to the Internet)

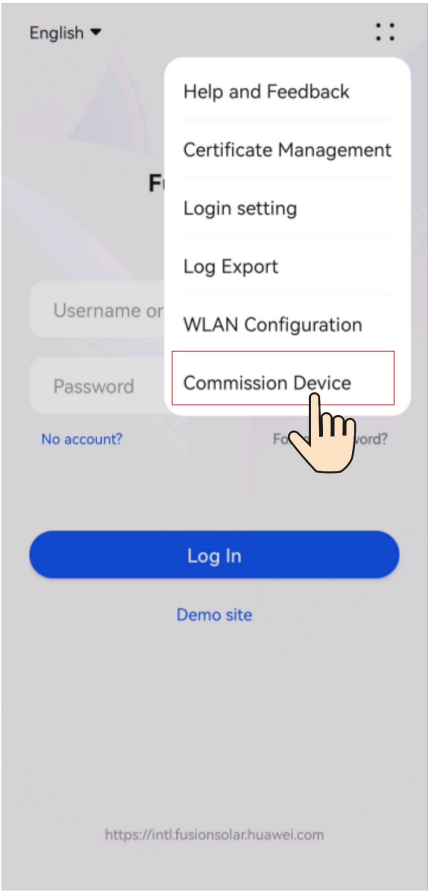

Figure C-2 Method 2: after login (connected to the Internet)

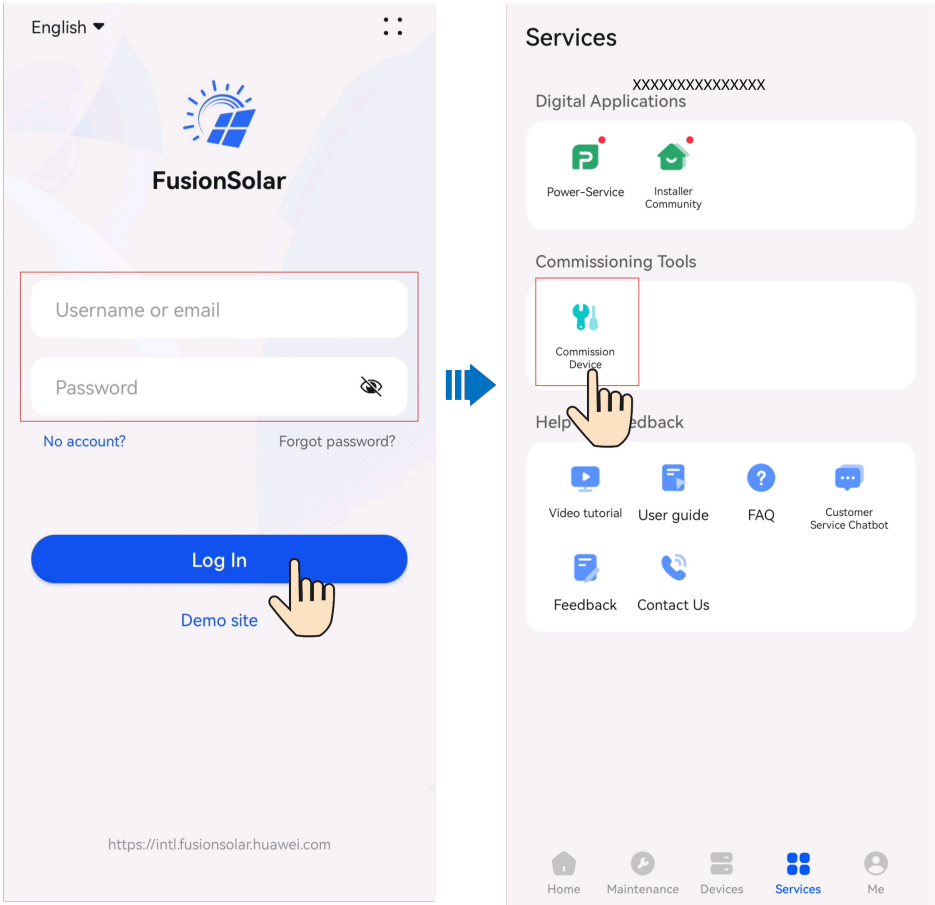

Step 2 Connect to the EMMA WLAN, log in as **Installer**, and access the device commissioning screen.

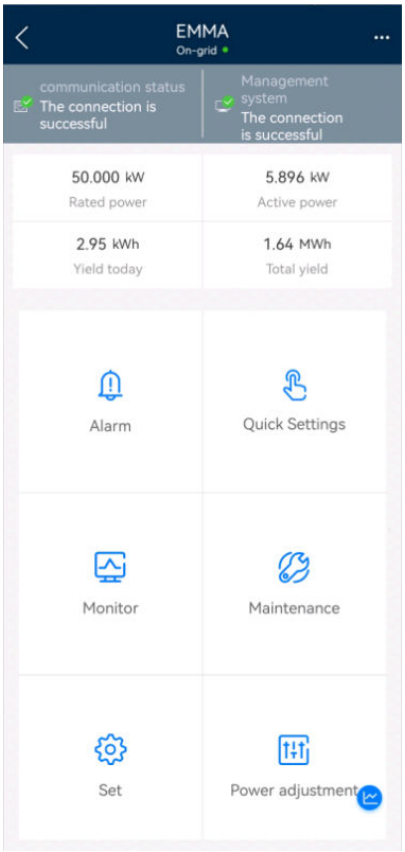

NOTICE

- When directly connecting your phone to a device, ensure that your phone is within the WLAN coverage of the device.
- When connecting the device to the router over WLAN, ensure that the device is within the WLAN coverage of the router and the signal is stable and good.
- The router supports WLAN (IEEE 802.11 b/g/n, 2.4 GHz) and the WLAN signal reaches the inverter.
- The WPA, WPA2, or WPA/WPA2 encryption mode is recommended for routers. The Enterprise mode is not supported (such as airport WLAN and other public hotspots that require authentication). WEP and WPA TKIP are not recommended because they have serious security vulnerabilities. If the access fails in WEP mode, log in to the router and change the encryption mode of the router to WPA2 or WPA/WPA2.

 Copyright © Huawei Digital Power Technologies Co., Ltd.

NOTE

- The last six digits of the product WLAN name are the same as the last six digits of the product SN.
- For the first connection, log in with the initial password. You can obtain the initial password from the label on the device.
- To ensure account security, protect the password by changing it periodically, and keep it secure. Your password might be stolen or cracked if it is left unchanged for extended periods. If a password is lost, devices cannot be accessed. In these cases, the Company shall not be liable for any loss.
- If the login screen is not displayed after you scan the QR code, check whether your phone is correctly connected to the device WLAN. If not, manually select and connect to the WLAN.
- If the **This WLAN network has no Internet access. Connect anyway?** message is displayed when you connect to the built-in WLAN, tap **CONNECT**. Otherwise, you cannot log in to the system. The actual UI and messages may vary with mobile phones.

----End

D Baud Rate Negotiation

Baud rate negotiation increases the communications rate between the inverter and devices such as batteries and power meters, and between the inverter and devices such as the Smart Dongles and the EMMA, solving or relieving communication congestion.

- During device search in a new plant, the system automatically negotiates the baud rate.
- When replacing or adding inverters, batteries, power meters, the Smart Dongle, or the EMMA at an existing plant, you need to manually send local commands on the FusionSolar app to reset the baud rate between devices and negotiate a higher rate.

NOTE

Users can send the baud rate negotiation commands on the FusionSolar app in three networking modes: Inverter connected to the NMS directly, EMMA networking and Smart Dongle networking.

Table D-1 Manual baud rate negotiation on the app

Networking Mode	Scenario	Operation
Inverter connected to the NMS directly	Replacing the inverter	1. Use the FusionSolar app to locally scan the QR code to connect to the inverter. 2. Access the **Communication configuration** screen, choose **RS485** > **Baud Rate Negotiation** > **RS485_2** > **Baud Rate Negotiation**, and tap **9600** and **Negotiate a higher rate**.
	Replacing or adding an RS485_2 device (such as a battery or power meter)	

Networking Mode	Scenario	Operation
EMMA networking	Replacing the EMMA	1. Use the FusionSolar app to locally scan the QR code to connect to the EMMA. 2. Access the **Communication settings** screen, choose **RS485 Settings > Baud Rate Negotiation**, and tap **9600** and **Negotiate a higher rate**.
	Replacing or adding an inverter	1. Use the FusionSolar app to locally scan the QR code to connect to the EMMA. 2. Access the **Communication settings** screen, choose **RS485 Settings > Baud Rate Negotiation**, and tap **9600** and **Negotiate a higher rate**. 3. Use the FusionSolar app to locally scan the QR code to connect to the inverter. 4. Access the **Communication configuration** screen, choose **RS485** > **Baud Rate Negotiation** > **RS485_2** > **Baud Rate Negotiation**, and tap **9600** and **Negotiate a higher rate**.
	Replacing or adding an RS485_2 device (such as a battery or power meter)	1. Use the FusionSolar app to locally scan the QR code to connect to the inverter. 2. Access the **Communication configuration** screen, choose **RS485** > **Baud Rate Negotiation** > **RS485_2** > **Baud Rate Negotiation**, and tap **9600** and **Negotiate a higher rate**.
Smart Dongle networking	Replacing the Smart Dongle	1. Use the FusionSolar app to locally scan the QR code to connect to the inverter. 2. Access the **Communication configuration** screen, choose **RS485** > **Baud Rate Negotiation** > **RS485_1** > **Baud Rate Negotiation**, and tap **9600** and **Negotiate a higher rate**.

 Copyright © Huawei Digital Power Technologies Co., Ltd.

Networking Mode	Scenario	Operation
	Replacing or adding an inverter	1. Use the FusionSolar app to locally scan the QR code to connect to the inverter. 2. Access the **Communication configuration** screen, choose **RS485** > **Baud Rate Negotiation** > **RS485_1** > **Baud Rate Negotiation**, and tap **9600** and **Negotiate a higher rate**. 3. Access the **Communication configuration** screen, choose **RS485** > **Baud Rate Negotiation** > **RS485_2** > **Baud Rate Negotiation**, and tap **9600** and **Negotiate a higher rate**.
	Replacing or adding an RS485_2 device (such as a battery or power meter)	1. Use the FusionSolar app to locally scan the QR code to connect to the inverter. 2. Access the **Communication configuration** screen, choose **RS485** > **Baud Rate Negotiation** > **RS485_2** > **Baud Rate Negotiation**, and tap **9600** and **Negotiate a higher rate**.

Troubleshooting

If manual baud rate negotiation fails, refer to the following troubleshooting measures.

Table D-2 Troubleshooting measures

Scenario	Troubleshooting
Negotiation failed	1. Check whether the device cables are connected properly. If no, connect the device cables correctly. 2. Check whether service operations such as upgrade and log export are performed on the management system. If yes, perform baud rate negotiation again after such operations are complete. 3. To replace an RS485_2 device (such as a battery or power meter), choose **Maintenance > Subdevice management** on the home screen, touch and hold the replaced RS485_2 device to delete it. 4. Perform baud rate negotiation again. 5. When replacing or adding an inverter or an RS485_2 device (such as a battery or power meter), if you tap **Negotiate a higher rate** and a message "Negotiation failed. The southbound device does not support the rate." is displayed, it indicates that the device does not support baud rate negotiation. In this case, you only need to tap **9600**. 6. If the fault persists, contact your vendor.

E Resetting Password

Step 1 Check that the AC and DC sides of the inverter are both powered on, and indicators and are steady green or blinking slowly for more than 3 minutes.

Step 2 Complete the following operations within 4 minutes:

Turn off the AC switch and set **DC SWITCH** to **OFF** at the bottom of the inverter. If the inverter is connected to a battery, turn off the battery switch. Wait until all LED indicators on the inverter panel turn off.

Turn on the AC switch and set **DC SWITCH** to **ON**. Wait about 90s and check that indicator is blinking green slowly.

Turn off the AC switch and set **DC SWITCH** to **OFF**. Wait until all LED indicators on the inverter panel turn off.

Turn on the AC switch and set **DC SWITCH** to **ON**. Wait until all LED indicators on the inverter panel blink and then turn off after 30s.

Step 3 Reset the password within 10 minutes. (If no operation is performed within 10 minutes, all parameters of the inverter remain unchanged.)

1. Wait until indicator blinks green slowly.
2. Connect to the app using the initial WLAN hotspot name (SSID) and initial password (PSW), which can be obtained from the label on the side of the inverter.
3. On the login screen, set a new password and log in to the app.

Step 4 Set router and management system parameters to implement remote management.

----End

F Contact Information

If you have any questions about this product, please contact us.

https://digitalpower.huawei.com

Path: **About Us** > **Contact Us** > **Service Hotlines**

To ensure faster and better services, we kindly request your assistance in providing the following information:

- Model
- Serial number (SN)
- Software version
- Alarm ID or name
- Brief description of the fault symptom

 Copyright © Huawei Digital Power Technologies Co., Ltd.

NOTE

EU Representative Information: Huawei Technologies Hungary Kft.
Add.: HU-1133 Budapest, Váci út 116-118., 1. Building, 6. floor.
Email: hungary.reception@huawei.com

G Digital Power Customer Service

https://digitalpower.huawei.com/robotchat/

 Copyright © Huawei Digital Power Technologies Co., Ltd.

H Certificate Management and Maintenance

H.1 Initial Certificate Risk Disclaimer

Huawei's initial certificates are mandatory identity credentials for Huawei devices before delivery. The disclaimer statements for using the certificates are as follows:

1. Initial Huawei-issued certificates are used only in the deployment phase, for establishing initial security channels between devices and the customer's network. Huawei does not promise or guarantee the security of initial certificates.
2. The customer shall bear consequences of all security risks and security incidents involved in using initial Huawei-issued certificates as service certificates.
3. An initial Huawei-issued certificate is valid until 2041 starting from the manufacturing date.
4. Services using an initial Huawei-issued certificate will be interrupted when the certificate expires.
5. It is recommended that customers deploy a PKI system to issue certificates for devices and software on the live network and manage the lifecycle of the certificates. To ensure security, certificates with short validity periods are recommended.

   NOTE

   You can view the validity period of an initial certificate on the network management system.

 Copyright © Huawei Digital Power Technologies Co., Ltd.

H.2 Application Scenarios of initial Certificates

File Path and Name	Scenario	Replacement
f:/sun_ca.crt	Authenticates the validity of the peer mobile app for communication through Modbus TCP.	For details about how to replace a certificate, contact technical support engineers to obtain the corresponding security maintenance manual. Certificates for communication between the Company's products can be replaced.
f:/sun_tomcat_client.crt		
f:/sun_tomcat_client.key		

I Acronyms and Abbreviations

A	
AC	alternating current
D	
DC	direct current
DCI	direct current identification
F	
FRT	fault ride through
H	
HVRT	high voltage ride-through
I	
ID	identifier
L	
LED	light emitting diode
LVRT	low voltage ride-through
M	
MAC	Media Access Control
MPPT	maximum power point tracking
P	
PE	protective earthing

 Copyright © Huawei Digital Power Technologies Co., Ltd.

PV	photovoltaic
R	
RCMU	residual current monitoring unit
RH	relative humidity
S	
SN	serial number

 Copyright © Huawei Digital Power Technologies Co., Ltd.